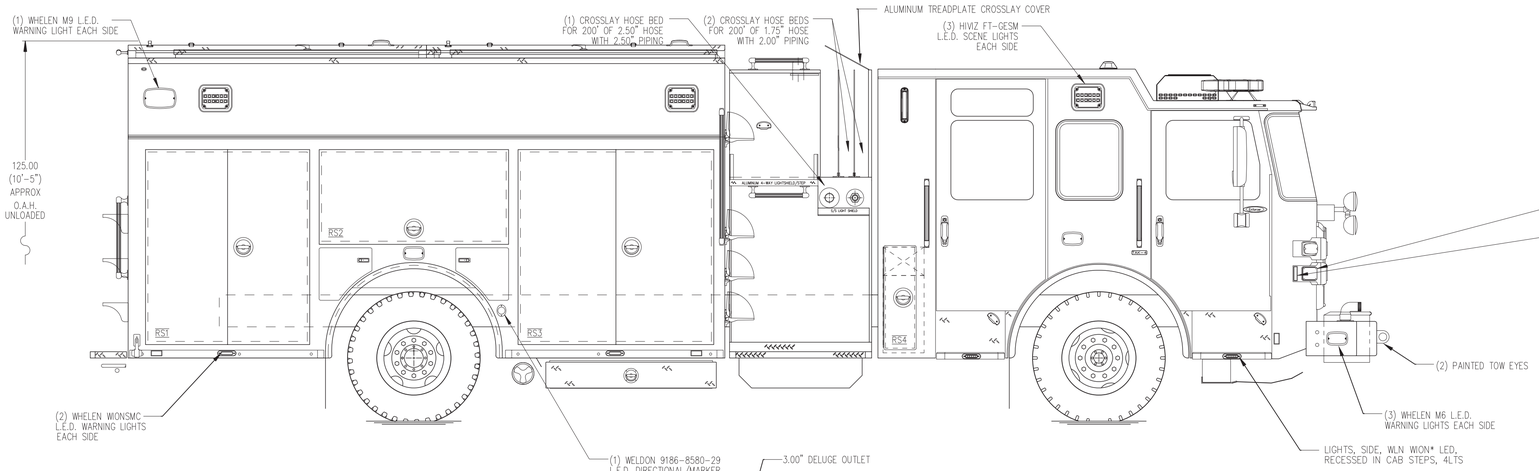

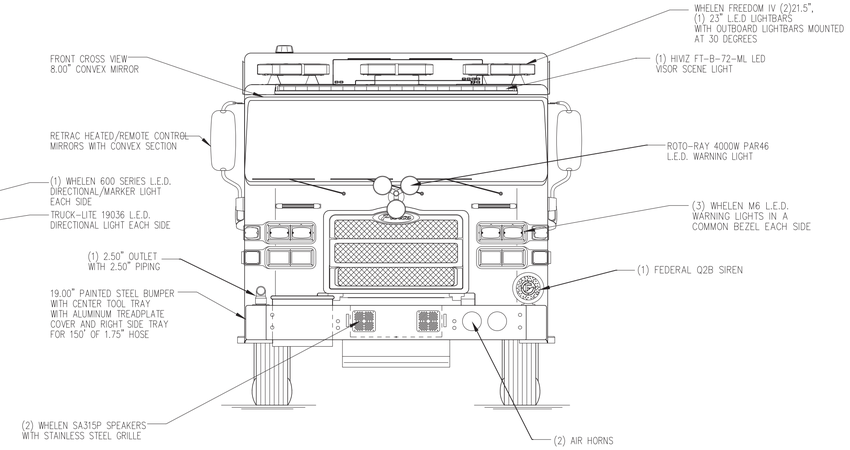

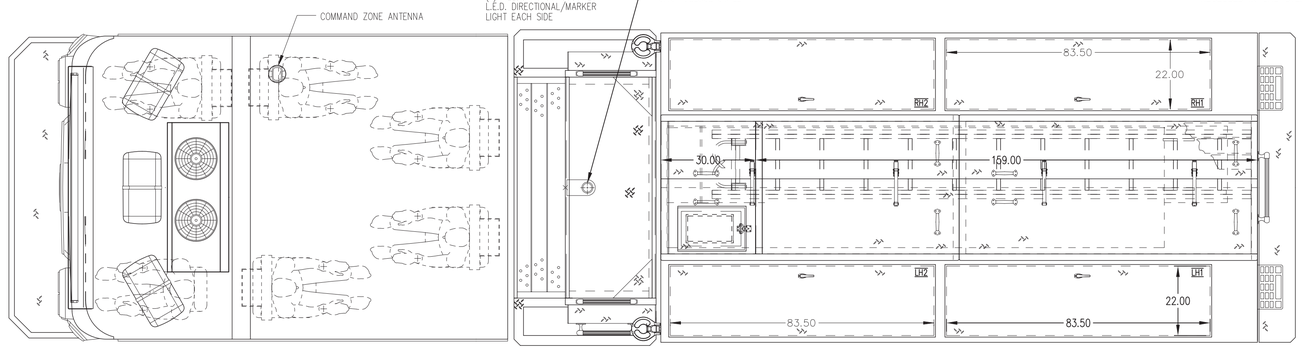

HOSEBED CAPACITIES

1. 600' OF 2.50" D.J. POLY HOSE
2. 1000' OF 5.00" D.J. POLY HOSE

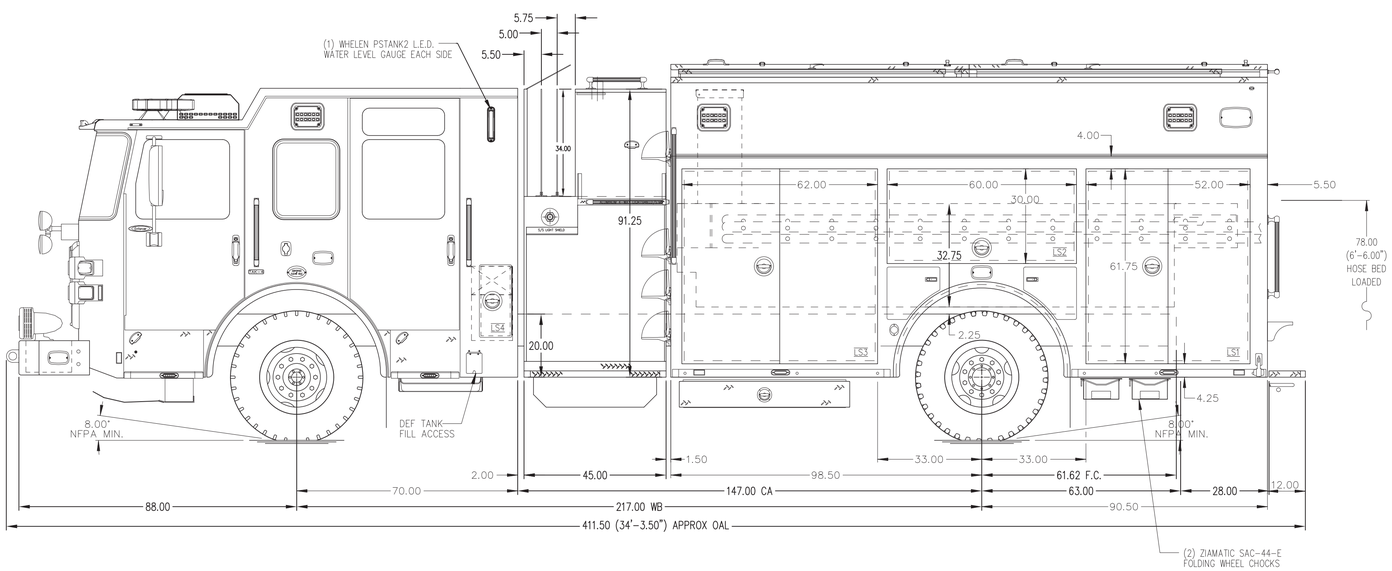

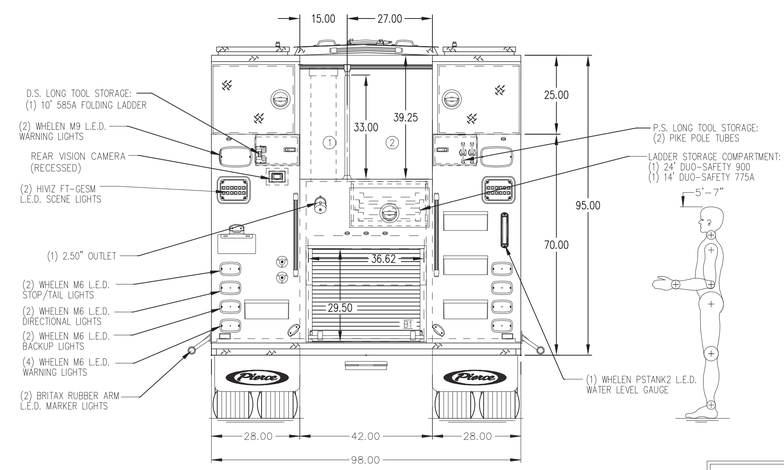

NFPA 1900 (2024) COMPLIANT

ALUMINUM BODY

SIDE ROLL AND FRONTAL IMPACT PROTECTION

NOTE

DIMENSIONS SHOWN ARE APPROXIMATE AND ARE SUBJECT TO MINOR DEVIATIONS AS MAY OCCUR OR BE NECESSARY IN CONSTRUCTION.
MINOR DETAILS NOT SHOWN.

1. SHORELINE RECEPTACLE WITH KUSSMAUL SUPER AUTO-EJECT LOCATED ON DRIVER SIDE OF THE CAB
2. AIR INLET WITH DISCONNECT COUPLING IN THE DRIVER SIDE STEPWELL
3. BATTERY CHARGER LOCATED PER ORDER
4. BATTERY CHARGE INDICATOR LOCATED ON DRIVER SEAT RISER

REV	DATE	BY	CH
▽	–	–	–

CHASSIS DATA: MAKE PIERCE; MODEL ENFORCER

Pierce MANUFACTURING INC.

TITLE: 1500 GPM, 500 GAL POLY TANK 189" HDRP, MUX

FOR: MUHLENBERG TOWNSHIP FIRE RESCUE READING, PA

DWG NO.: PRELIMINARY PRINT ONLY

PROPOSAL	1110
SCALE 1:24	DATE
DRAWN BY KRG	16JUL2026
CHECKED BY N/A	N/A
SHEET SIZE D	SHEET NO. 1 OF 1