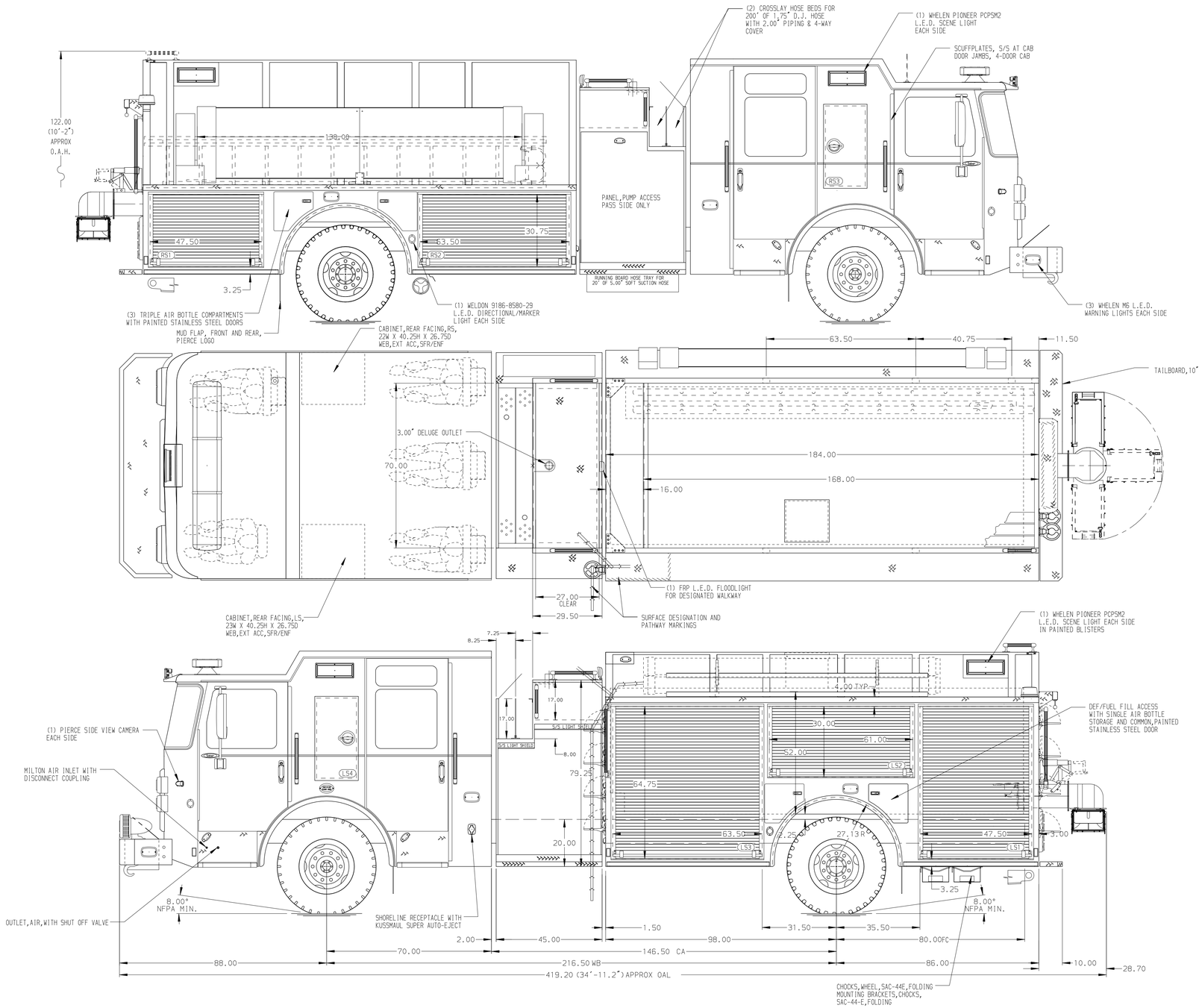

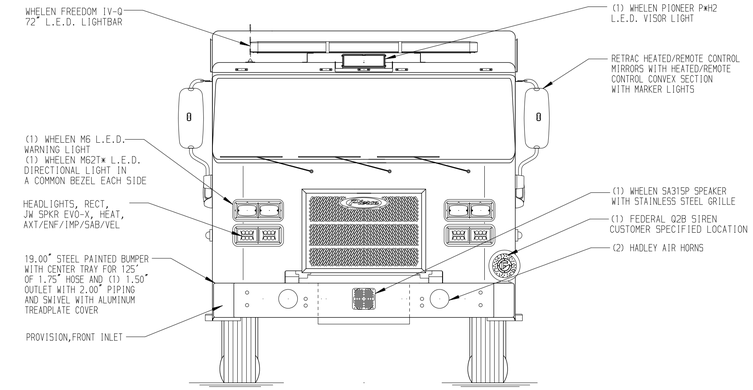

HOSEBED CAPACITIES

1. 1000' OF 5.00" D.J. POLYESTER HOSE
2. 600' OF 3.00" D.J. POLYESTER HOSE

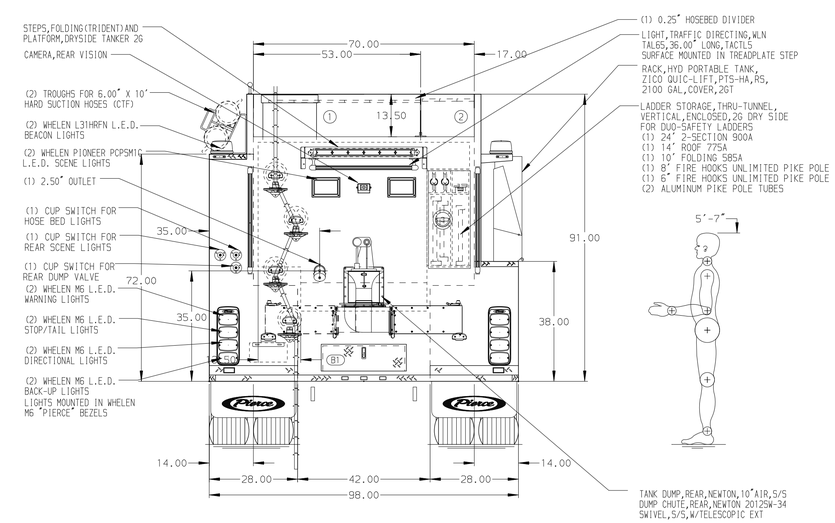

ALUMINUM BODY

SIDE ROLL AND FRONTAL IMPACT PROTECTION

NOTE

DIMENSIONS SHOWN ARE APPROXIMATE AND ARE SUBJECT TO MINOR DEVIATIONS AS MAY OCCUR OR BE NECESSARY IN CONSTRUCTION.
MINOR DETAILS NOT SHOWN.

REV	DATE	BY	CH
▽	-	-	-

CHASSIS DATA	TITLE	1500GPM, 1800G TANK, 1800G WATER 184" BODY TANKER, HARDWIRED	
MAKE: PIERCE	FOR	PIERCE STOCK FIELD UNIT -	
MODEL: SABER FR	DWG NO.	46100AD	

Pierce MANUFACTURING INC.

JOB NO.	46100
SCALE 1:24	DATE
DRAWN BY VHO	27MAR25
CHECKED BY MAR	29MAY26
SHEET SIZE D	SHEET NO. 1 OF 1

View File Created 29-MAY-2026 12:06:49