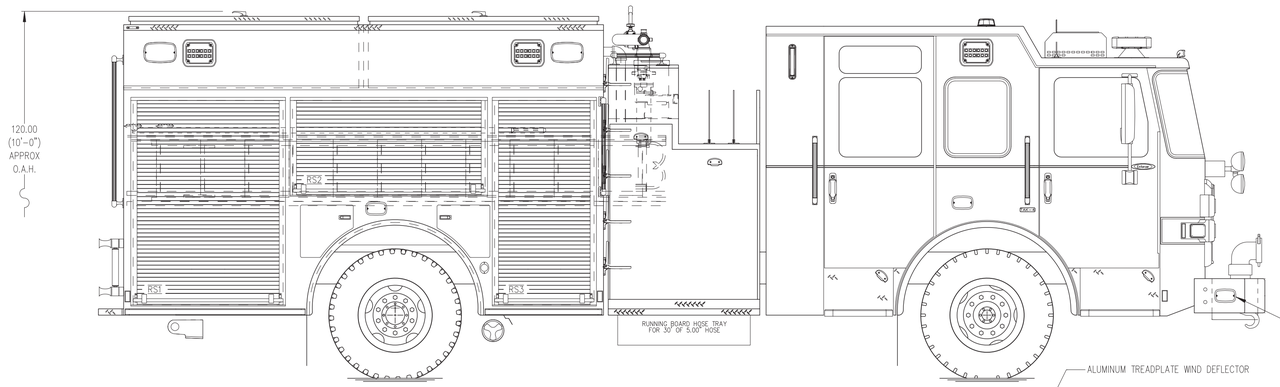

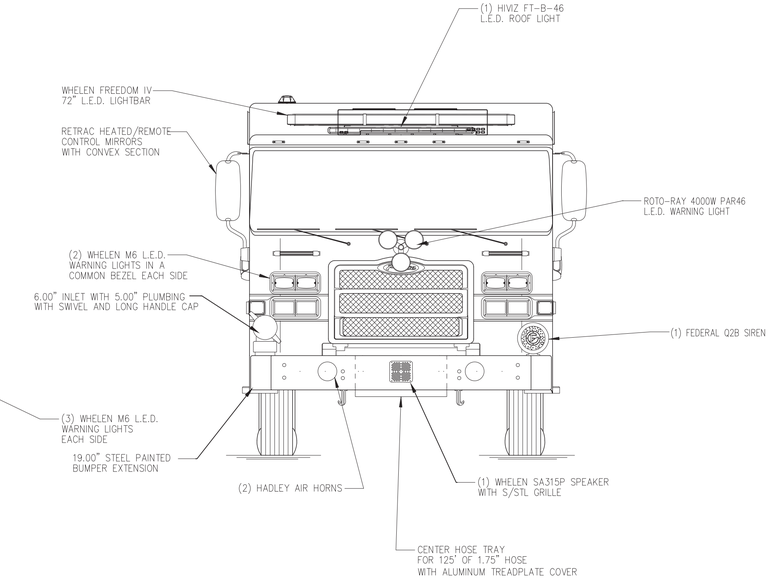

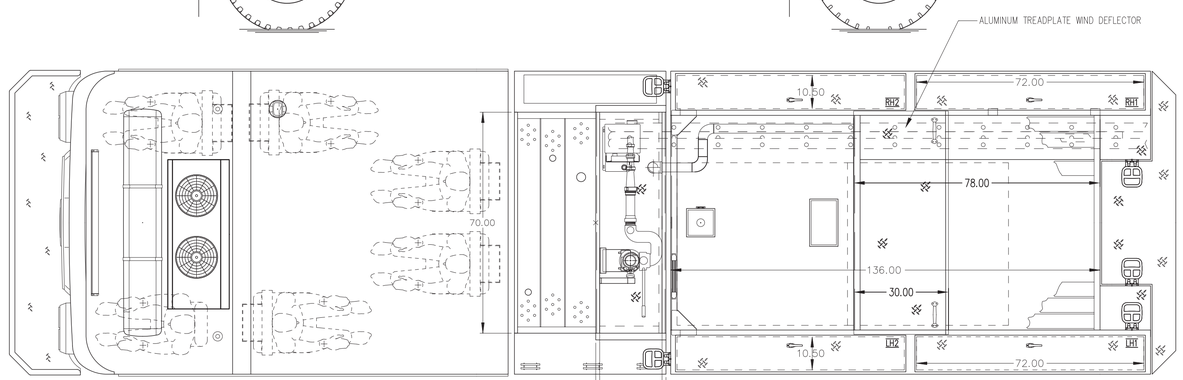

HOSEBED CAPACITIES

1. 200' OF 1.75" D.J. POLY HOSE
2. 300' OF 2.50" D.J. POLY HOSE
3. 1000' OF 5.00" D.J. POLY HOSE
4. 250' OF 3.00" D.J. POLY HOSE ABOVE LADDER STORAGE

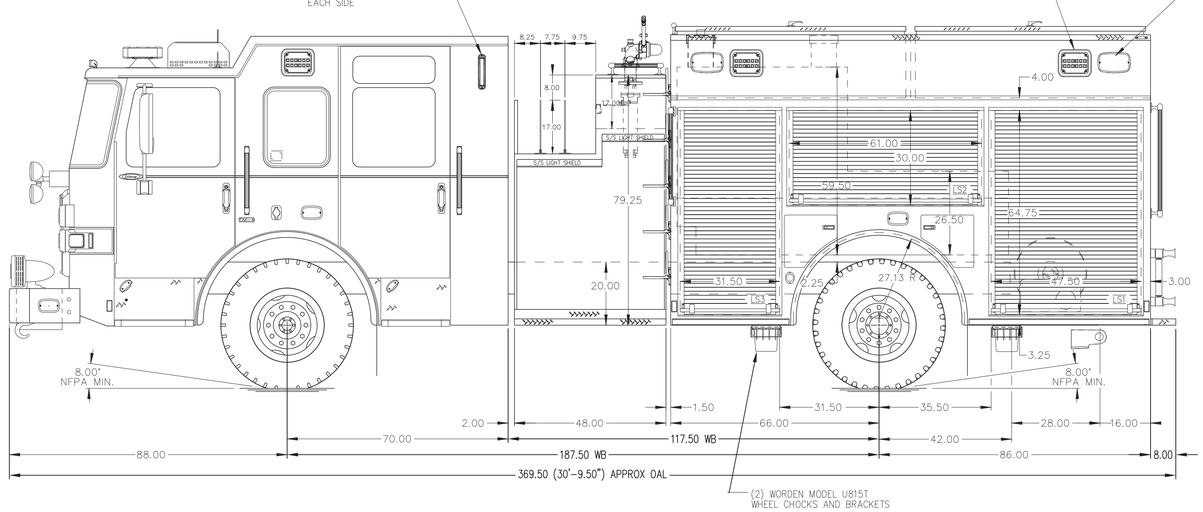

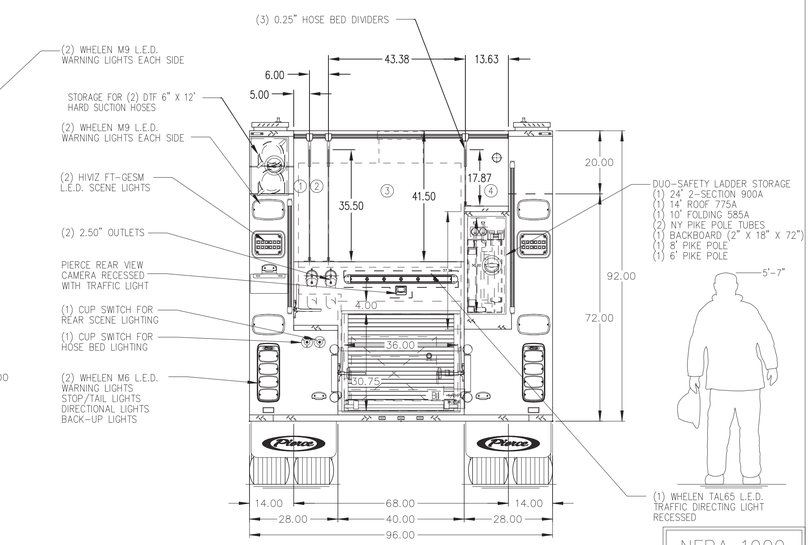

NFPA 1900
(2024)
COMPLIANT

ALUMINUM BODY

SIDE ROLL AND FRONTAL PROTECTION

NOTE

DIMENSIONS SHOWN ARE APPROXIMATE AND ARE SUBJECT TO MINOR DEVIATIONS AS MAY OCCUR OR BE NECESSARY IN CONSTRUCTION.
MINOR DETAILS NOT SHOWN.

1. ONE 1.50 OUTLET WITH 2.00 PIPING AND SWIVEL LOCATED IN CENTER BUMPER TRAY
2. SHORELINE RECEPTACLE WITH KUSSMAUL SUPER AUTO-EJECT LOCATED ON DRIVER SIDE OF CAB
3. AIR INLET WITH DISCONNECT COUPLING IN THE DRIVER SIDE STEPWELL
4. BATTERY CHARGER LOCATED BEHIND DRIVER'S SEAT
5. FOUR ADJUSTABLE SHELVES IN COMPARTMENTS PER SHOP ORDER
6. ONE 120V RECEPTACLE LOCATED PER SHOP ORDER
7. FOUR FLOOR MOUNTED TRAYS LOCATED IN COMPARTMENT PER SHOP ORDER
8. ONE HANNAY BOOSTER REEL (MODEL EF34-23-24) FOR 200' OF 1.00" HOSE LOCATED IN B1

REV	DATE	BY	CH
▽	–	–	–

CHASSIS DATA	
MAKE	PIERCE
MODEL	ENFORCER
DWG NO.	PRELIMINARY PRINT ONLY
TITLE	1500GPM, 775G TANK, 750G WATER, 25F FOAM 152" BODY PUMPER 2G, MUX
FOR	GLICK FIRE EQUIPMENT COMPANY, INC (JOB #44889) BIRD-IN-HAND, PA

Pierce MANUFACTURING INC.

PROPOSAL	1091
SCALE 1:24	DATE
DRAWN BY KRG	15SEP2025
CHECKED BY N/A	N/A
SHEET SIZE D	SHEET NO. 1 OF 1