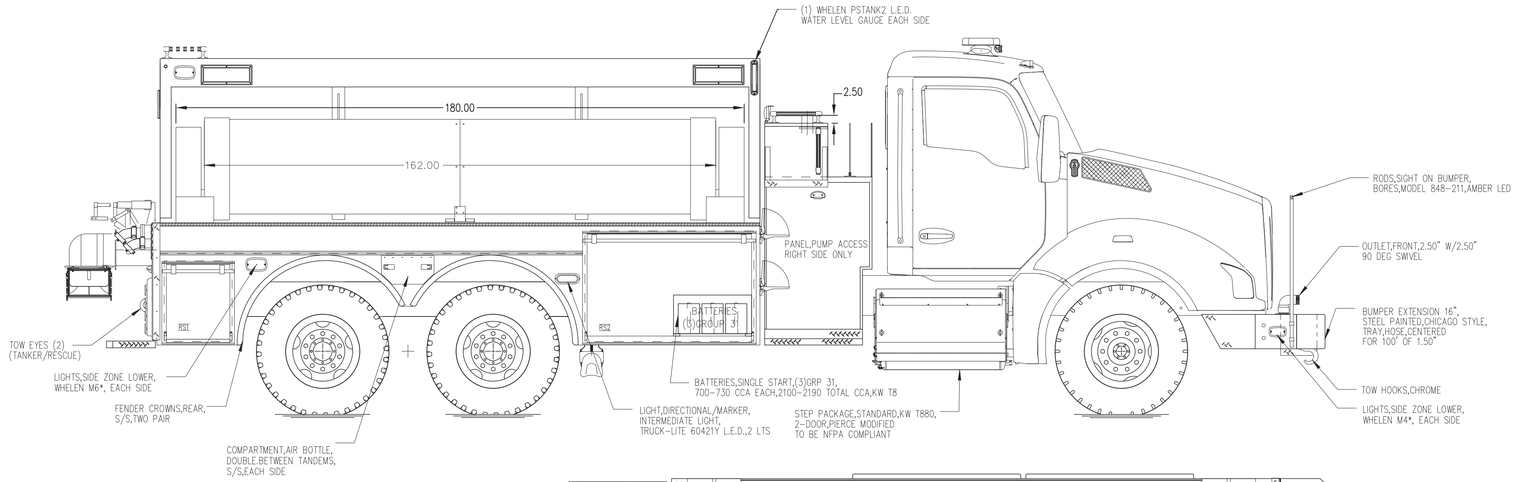

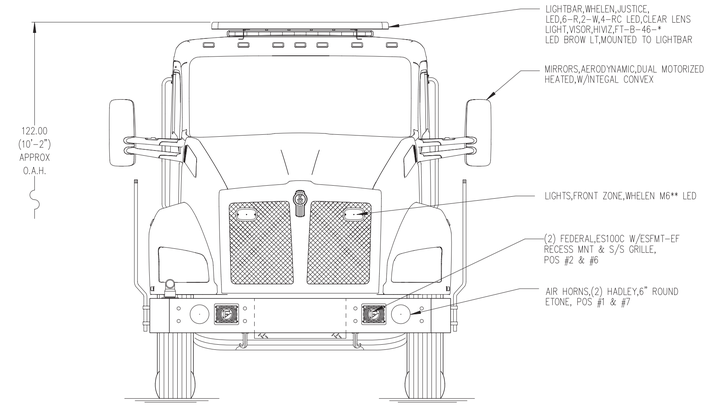

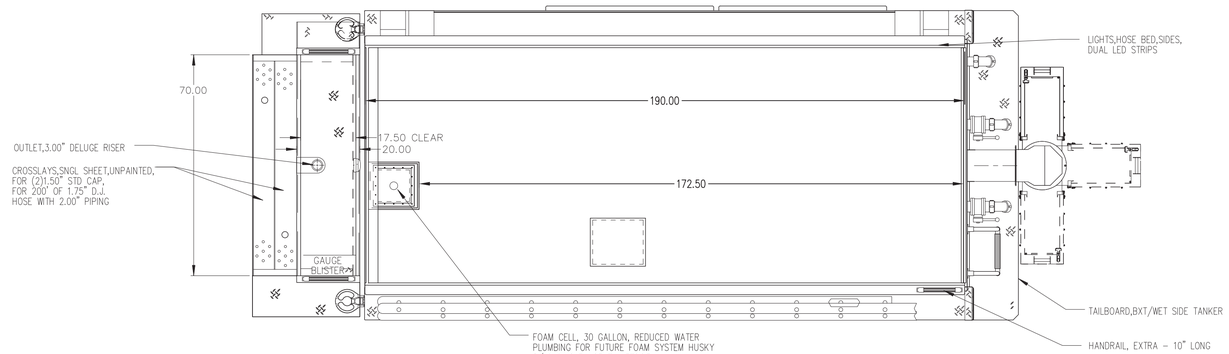

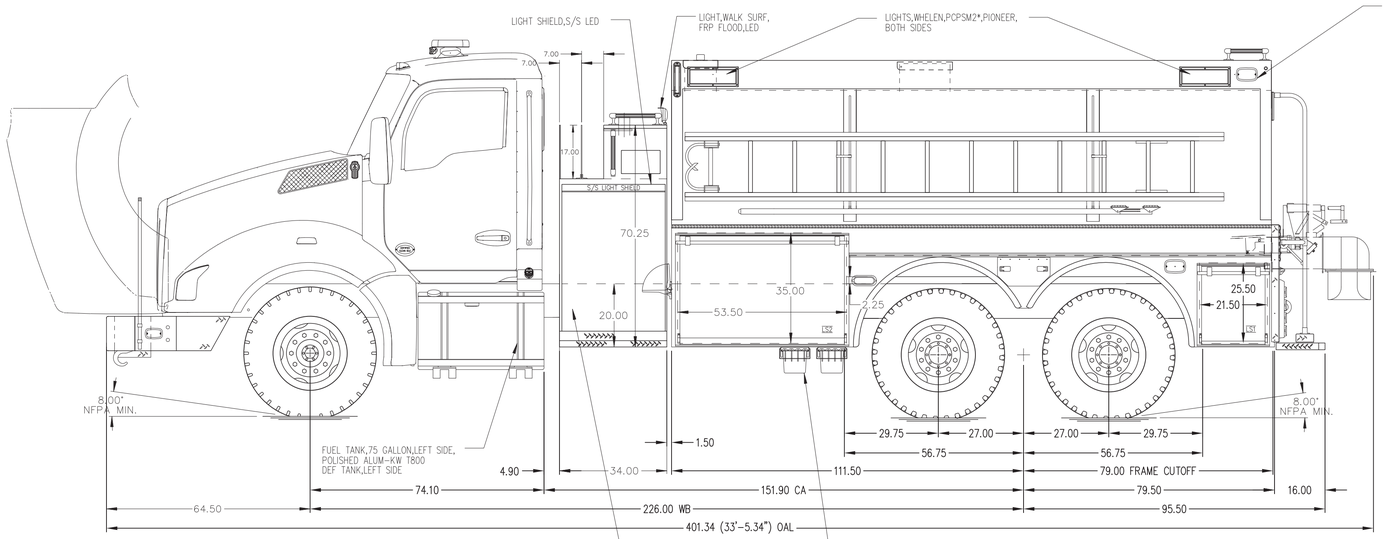

HOSEBED CAPACITIES

(1) 200' OF 2.50" D.J. POLY HOSE

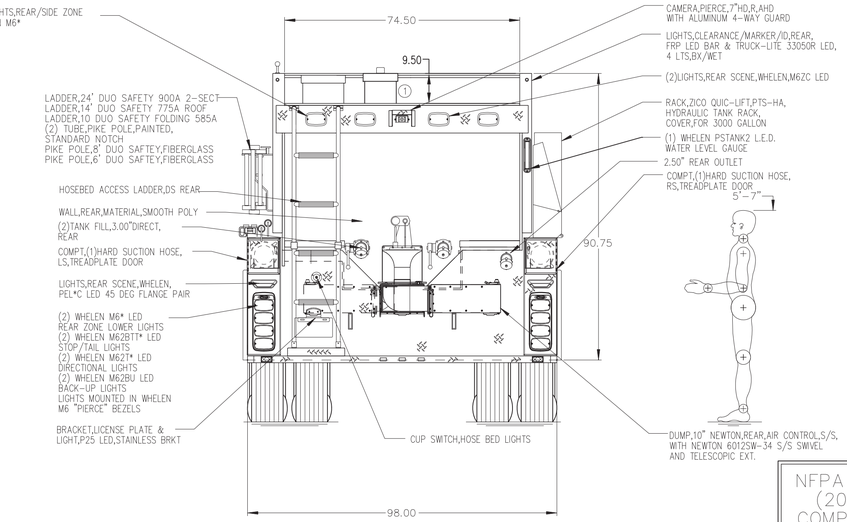

NFPA 1900
(2024)
COMPLIANT

ALUMINUM BODY

NOTE

DIMENSIONS SHOWN ARE APPROXIMATE AND ARE SUBJECT TO MINOR DEVIATIONS AS MAY OCCUR OR BE NECESSARY IN CONSTRUCTION.
MINOR DETAILS NOT SHOWN.

REV	DATE	BY	CH
▽	–	–	–

CHASSIS DATA	TITLE	1250-D-3000P, 2970G WATER, 30G FOAM, 190" WETSIDE TANKER 34" SIDE CONTROL, (2) 1.50" CROSSLAYS	PROPOSAL 1093
MAKE KW	FOR	GLICK FIRE EQUIPMENT COMPANY, INC (JOB #43177) BIRD-IN-HAND, PA	SCALE 1:24 / DATE
MODEL T880 6x4	DWG NO.	PRELIMINARY PRINT ONLY	DRAWN BY KRG / 06NOV2025
			CHECKED BY N/A / N/A
			SHEET SIZE D / SHEET NO. 1 OF 1

Pierce MANUFACTURING INC.