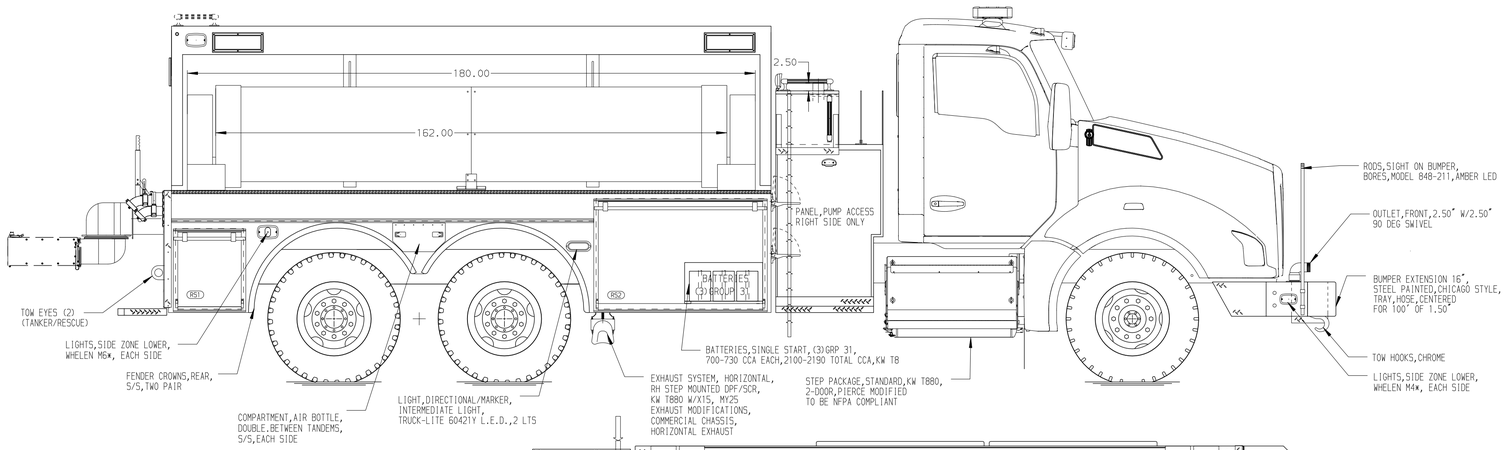

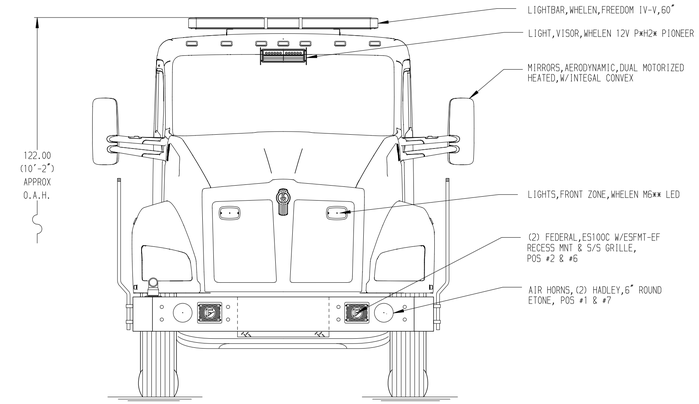

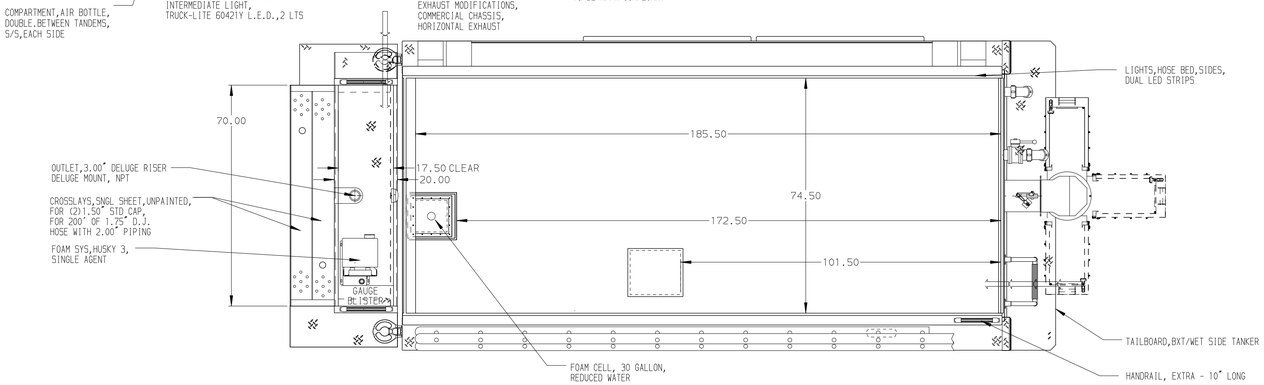

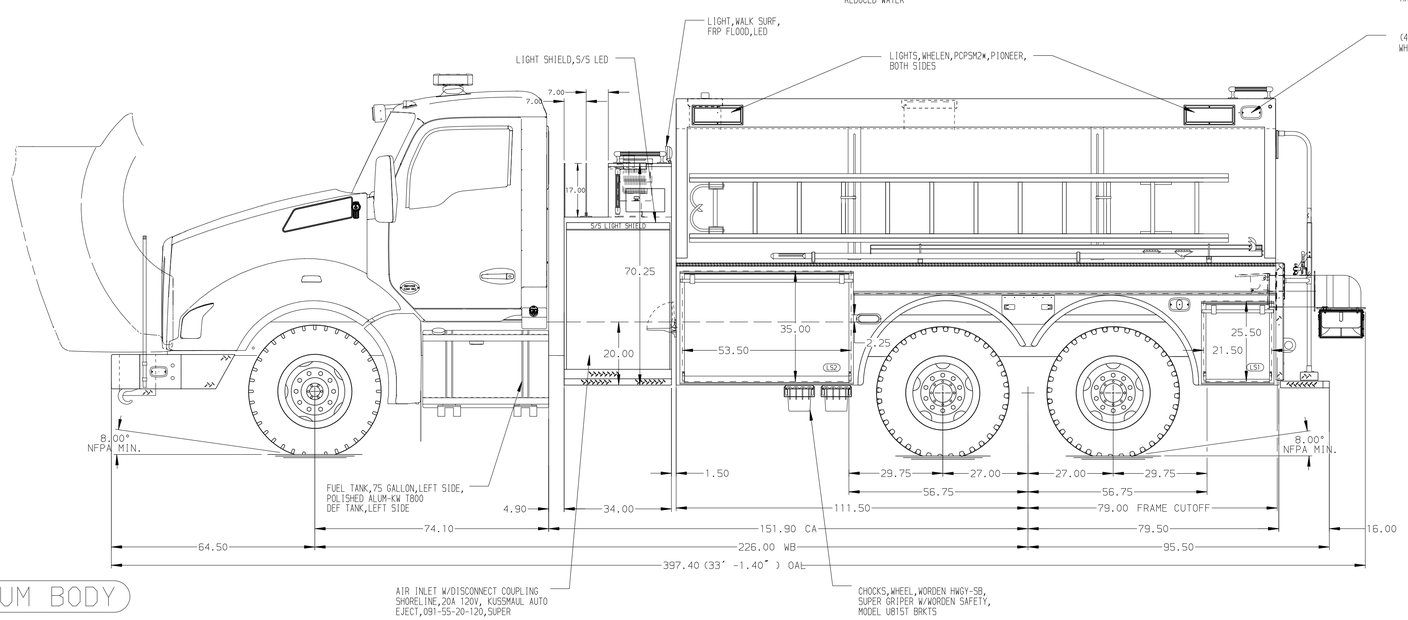

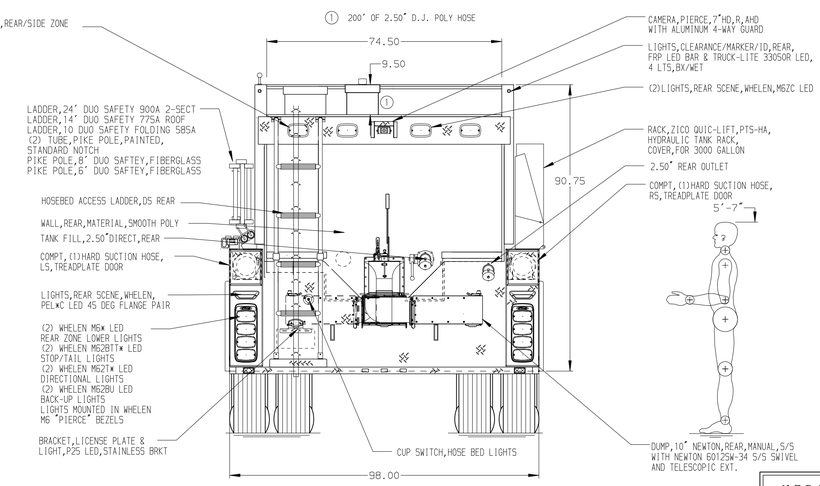

ALUMINUM BODY

NFPA 1900 (2024) COMPLIANT

NOTE

DIMENSIONS SHOWN ARE APPROXIMATE AND ARE SUBJECT TO MINOR DEVIATIONS AS MAY OCCUR OR BE NECESSARY IN CONSTRUCTION.
MINOR DETAILS NOT SHOWN.

REV	DATE	BY	CH
▽	-	-	-

CHASSIS DATA
MAKE: KW
MODEL: T880 6x4

Pierce MANUFACTURING INC.
BRADENTON, FLORIDA

TITLE: 1250GPM, 3000G TANK, 2970G WATER, 30G FOAM
190" BODY TANKER WET SIDE, MUX

FOR: PIERCE FIELD UNIT
BRADENTON, FLORIDA

DWG NO.: 43078AD

JOB NO.	43078
SCALE	1:24
DATE	
DRAWN BY	VHO
15NOV24	
CHECKED BY	AJA
19NOV24	
SHEET SIZE	D
SHEET NO.	1 OF 1

View File Created 19-NOV-2024 07:52:26