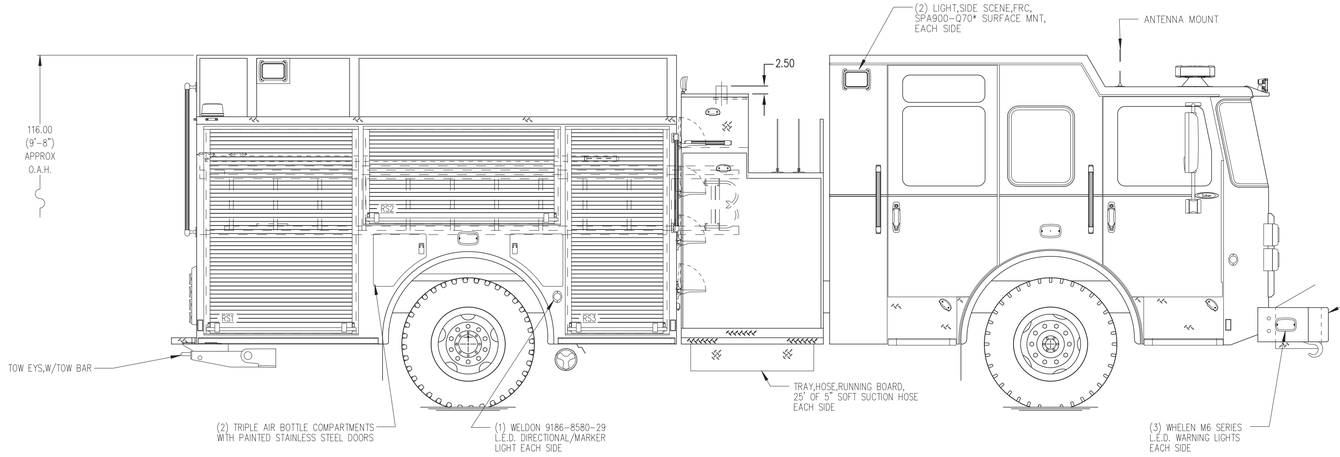

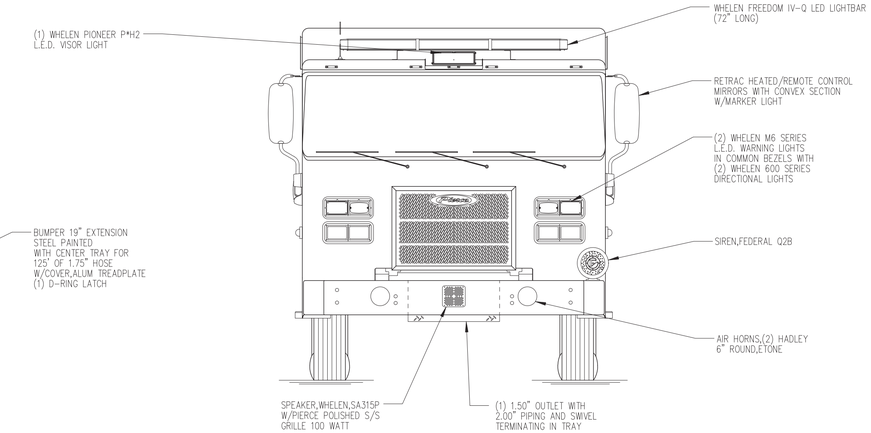

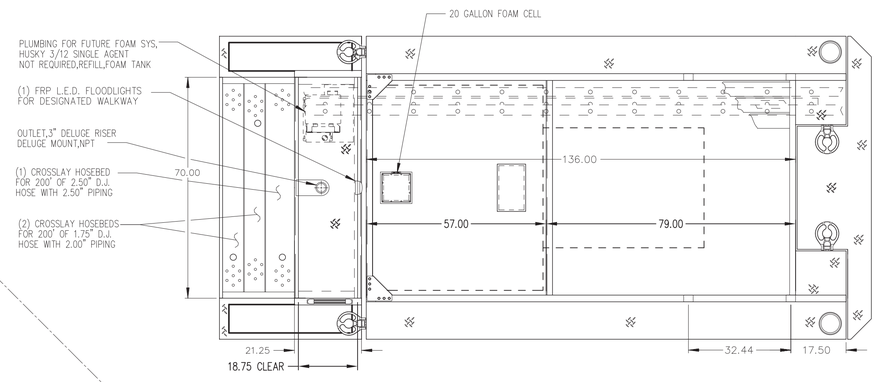

HOSEBED CAPACITIES

1. 1000' OF 5.00" D.J.POLY HOSE
2. 500' OF 2.50" D.J.POLY HOSE

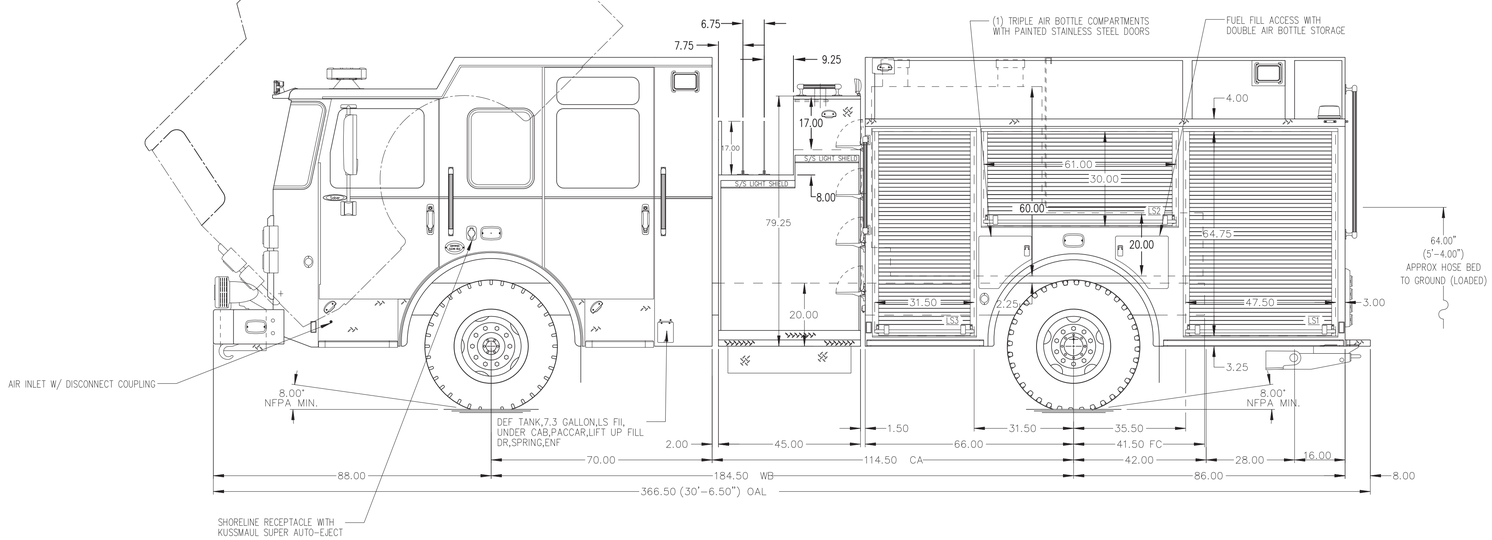

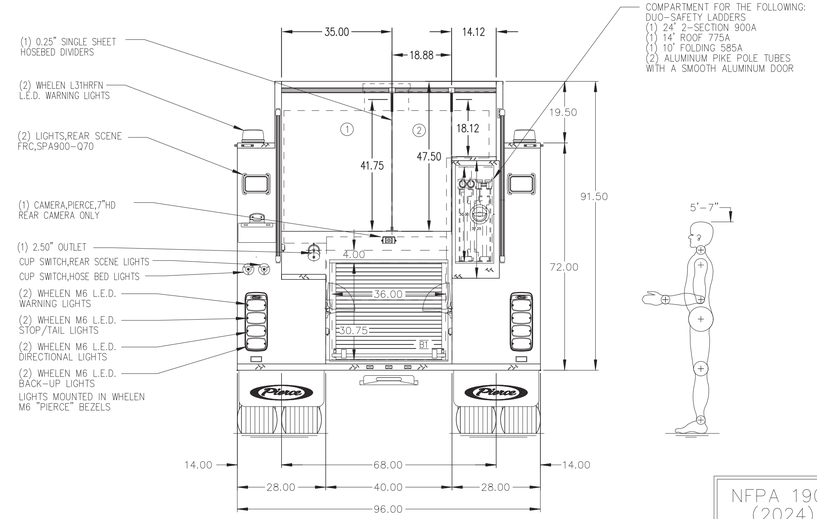

NFPA 1900 (2024) COMPLIANT

ALUMINUM BODY

NOTE

DIMENSIONS SHOWN ARE APPROXIMATE AND ARE SUBJECT TO MINOR DEVIATIONS AS MAY OCCUR OR BE NECESSARY IN CONSTRUCTION.
MINOR DETAILS NOT SHOWN.

REV	DATE	BY	CH
▽	–	–	–

Pierce MANUFACTURING INC.

CHASSIS DATA	TITLE	1500GPM, 750G TANK, 730G WATER, 20G FOAM 152" BODY PUMPER 2G, HARDWIRED	PROPOSAL 812
MAKE PIERCE	FOR	VALLEY REGIONAL FIRE AND RESCUE DRUMS, PA (JOB #44384AD)	SCALE 1:24 / DATE
MODEL SABER FR	DWG NO.	PRELIMINARY PRINT ONLY	DRAWN BY KRG / 17SEP2025
			CHECKED BY N/A / N/A
			SHEET SIZE D / SHEET NO. 1 OF 1