BUILD DETAILS	
ITEMS	VALUE
MODEL	XTR 1860
LENGTH	15'
WIDTH	60"
ENGINE	170/300 HP, ROTAX
BOTTOM THK	0.190
COLLAR MATERIAL	GREY URETHANE
COLLAR PRESSURE	2.5 PSI
FUEL CAPACITY	27 GAL.
BOW STORAGE	STANDARD
STOMP GRATE	STANDARD
BOTTOM UHMW	YES
SIDE UHMW	YES
AQUATRACTION COLOR	TBD
BOW COOLER/SEAT	NO
TRAILER	CUSTOM, DUAL

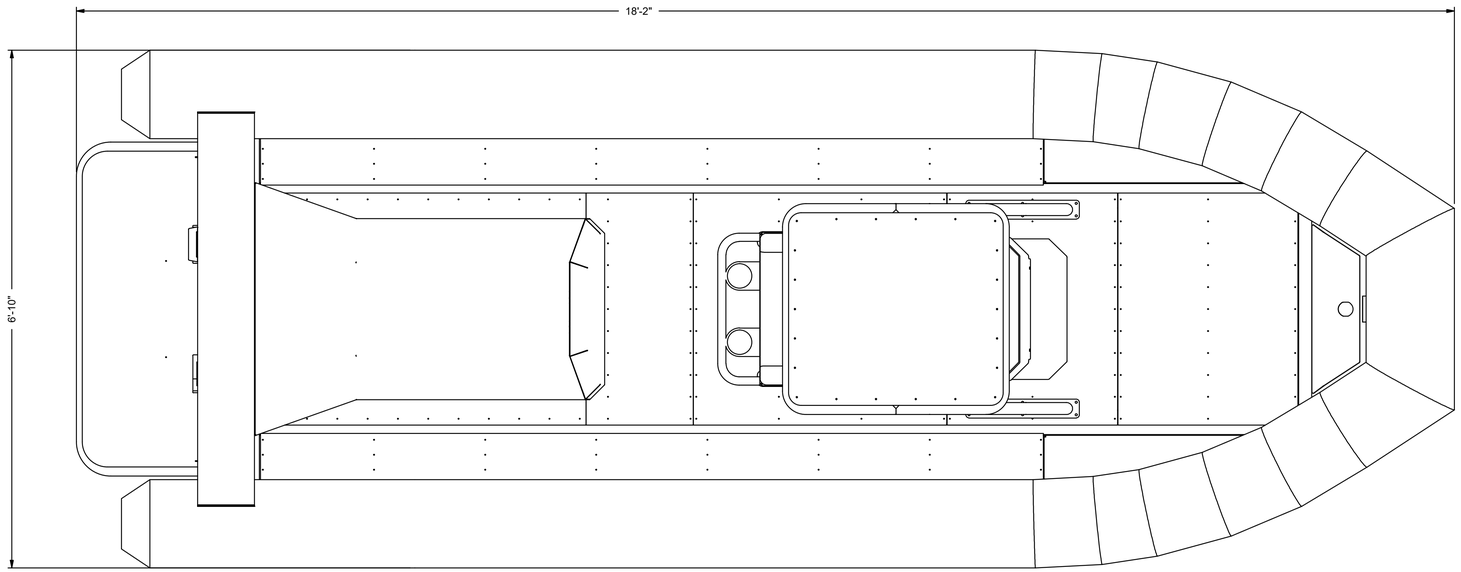

TOP VIEW
SCALE 1:12

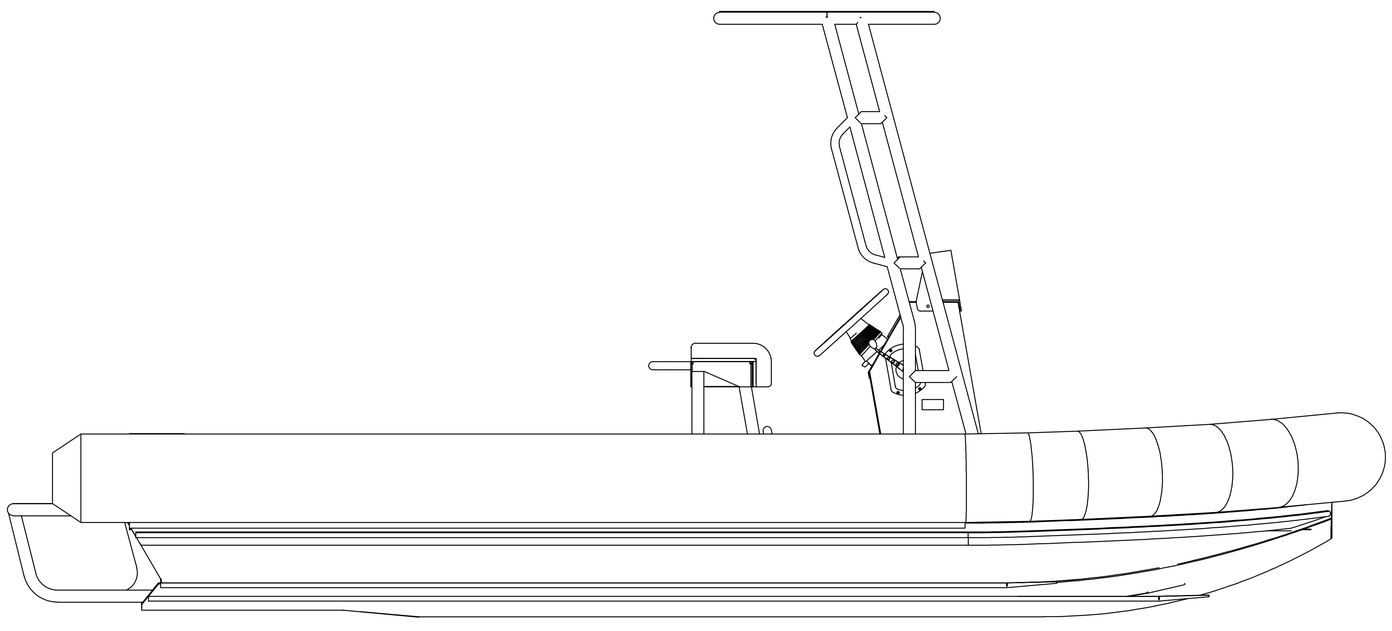

SIDE VIEW
SCALE 1:12

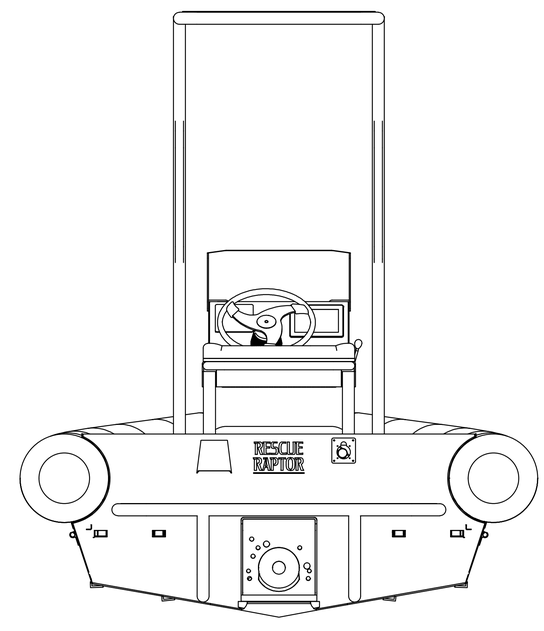

REAR VIEW
SCALE 1:12

THIS DRAWING IS THE PROPERTY OF RAPTOR DESIGN AND ENGINEERING AND SHALL NOT BE USED OR COPIED EXCEPT AS EXPRESSLY AUTHORIZED. ANY MISUSE OF THIS INFORMATION IS STRICTLY FORBIDDEN AND THE PARTIES RESPONSIBLE WILL BE LIABLE FOR ANY AND ALL DAMAGES SUFFERED AS A RESULT.

UNLESS OTHERWISE NOTED:
TOLERANCES
ON DIMENSIONS ARE:
.XX ±0.03
.XXX ±0.005
PROFILE/DIAM ±1/16 in
ANGULAR ACTION ±1/2 in
FINISH 125
SURFACE 125

DRAWN BY	CREATED	WEIGHT	DRAWING NUMBER	REVISION	DESCRIPTION
RPlank	11/22/2019	X LBS	D0146		XTR 1860
CHECKED BY	ISSUED	SCALE			
RPlank		AS SHOWN	PART NUMBER D0146-1860XTR	SHEET 26 OF 29	D

RAPTOR DESIGN & ENGINEERING

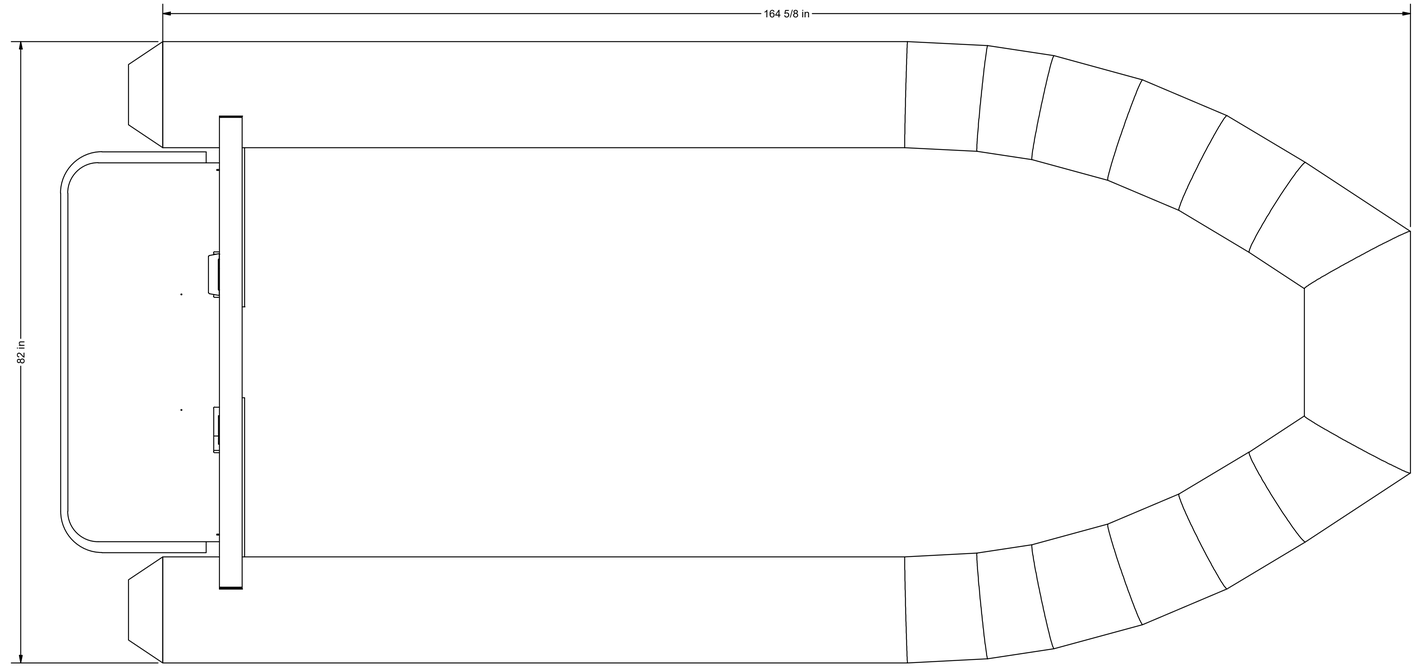

15' MODEL
SCALE 1:10

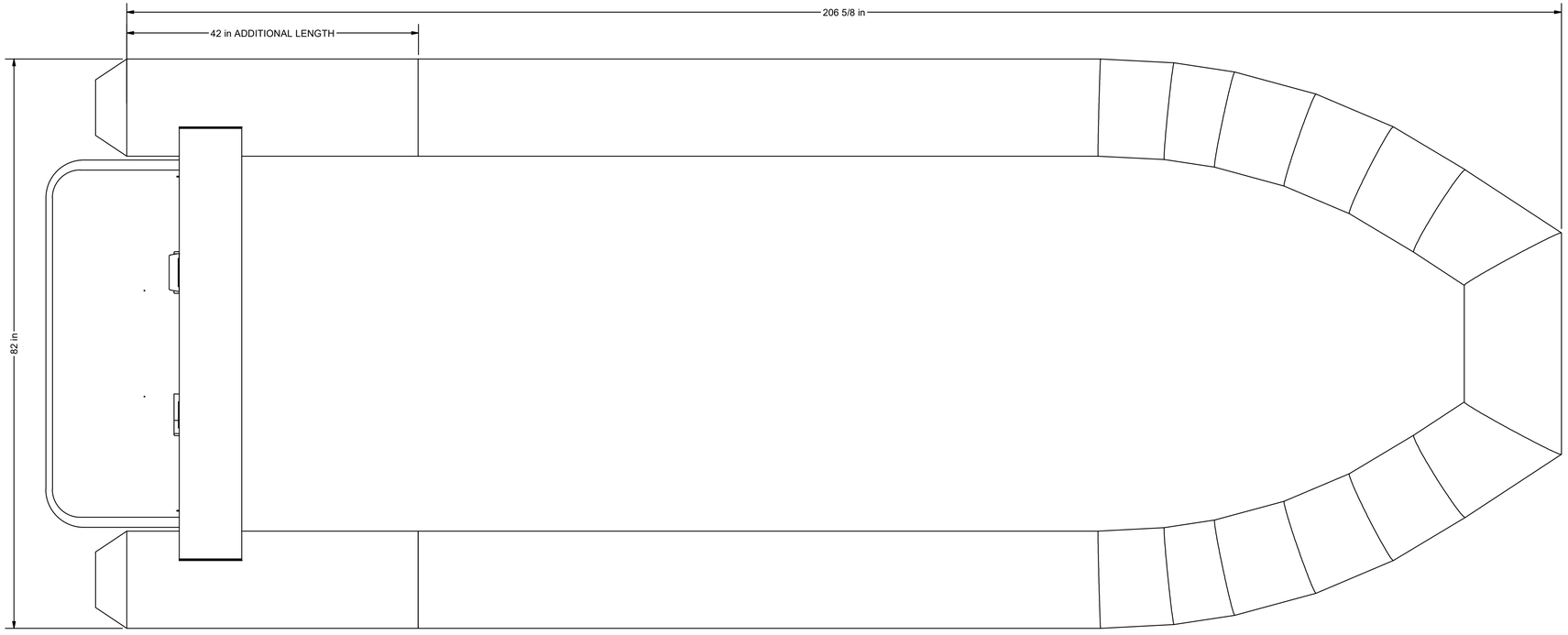

18' MODEL
SCALE 1:10

THIS DRAWING IS THE PROPERTY OF RAPTOR DESIGN AND ENGINEERING AND SHALL NOT BE USED OR COPIED EXCEPT AS EXPRESSLY AUTHORIZED. ANY MISUSE OF THIS DOCUMENT BY ANY PERSON OR VENDEN AND THE RECEIVER SHALL BE LIABLE FOR ANY AND ALL DAMAGES SUFFERED AS A RESULT.

UNLESS OTHERWISE NOTED:
TOLERANCES
ON DIMENSIONS ARE:
.XX ±0.01
.XXX ±0.005
FRACTIONS ±1/16 in.
FABRICATION ±1/16 in.
ANGLE ±1°
SURFACE 125

DRAWN BY	CREATED	WEIGHT	DRAWING NUMBER	REVISION	DESCRIPTION
RPlank	11/22/2019	X LBS	D0146		XTR 1860
CHECKED BY	ISSUED	SCALE			
RPlank		AS SHOWN	PART NUMBER D0146-1860XTR	SHEET 28 OF 29	D

RAPTOR
DESIGN & ENGINEERING