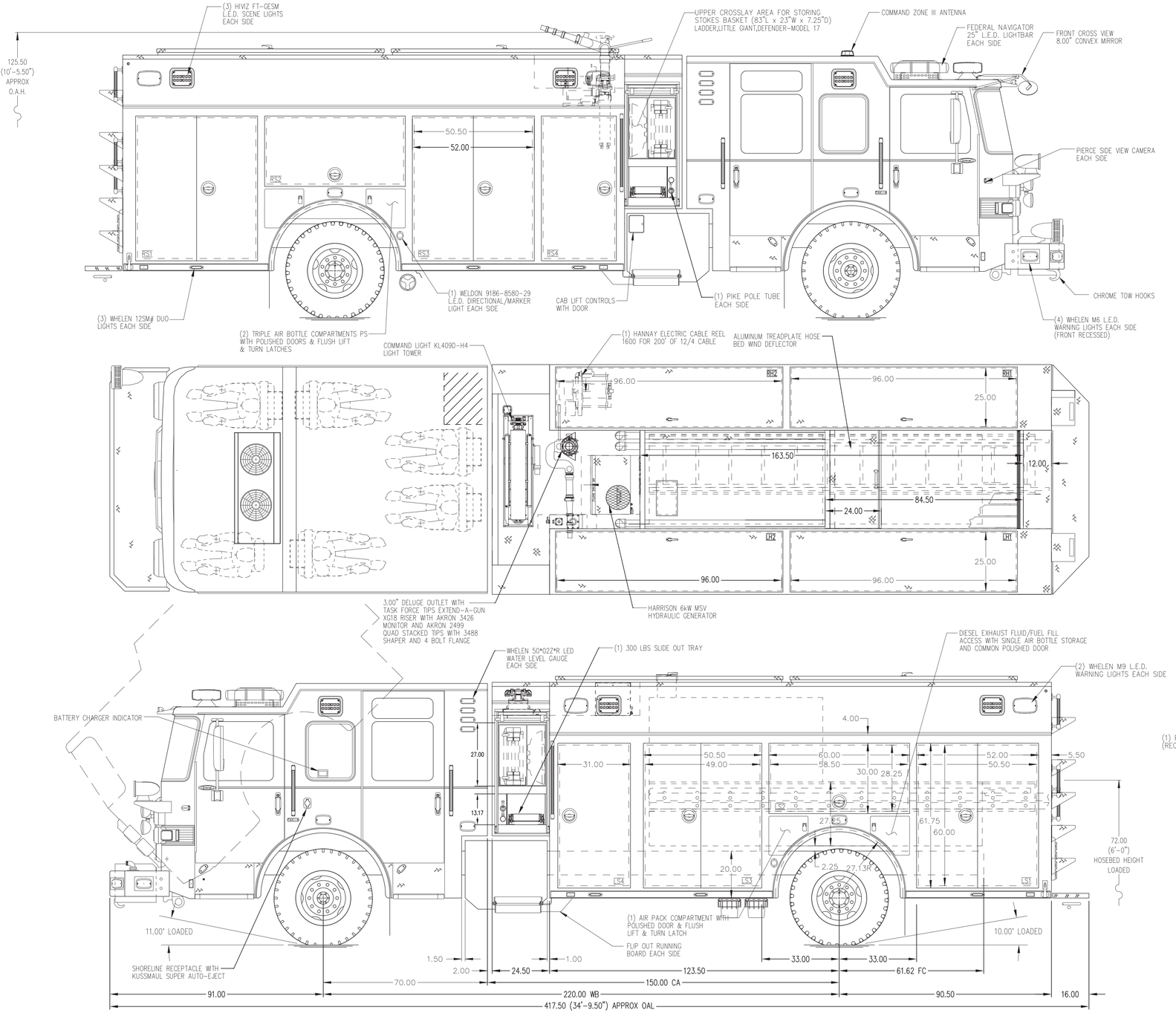

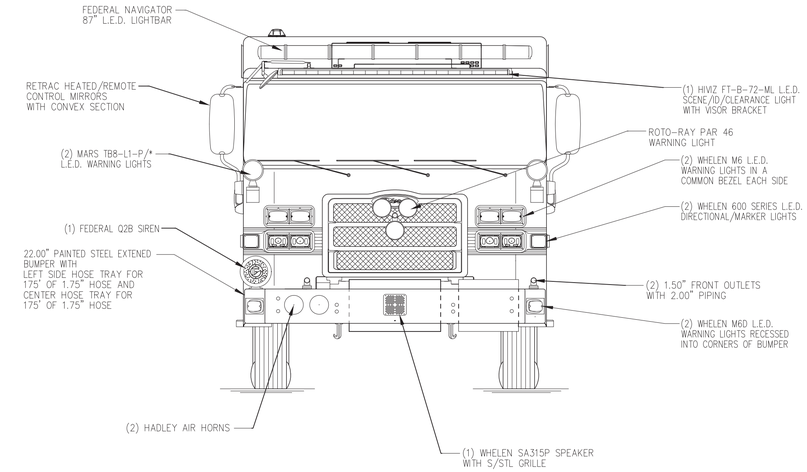

HOSEBED CAPACITIES

1. 200' OF 1.75" MERCEDES AQUAFLOW HOSE
2. 600' OF 3.00" MERCEDES AQUAFLOW HOSE
3. 900' OF 5.00" MERCEDES MEGAFLOW HOSE
4. 200' OF 2.50" MERCEDES AQUAFLOW HOSE
5. 300' OF 1.75" MERCEDES AQUAFLOW HOSE

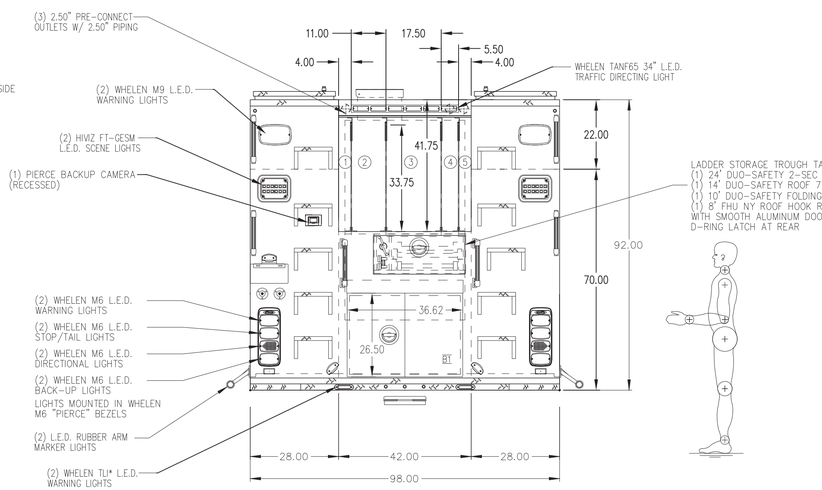

NFPA 1900 (2024) COMPLIANT

ALUMINUM BODY | MAXIMUM O.A.H. 10'-6" | MAXIMUM O.A.L. 34'-9.50" | SIDE ROLL AND FRONTAL IMPACT PROTECTION

NOTE

DIMENSIONS SHOWN ARE APPROXIMATE AND ARE SUBJECT TO MINOR DEVIATIONS AS MAY OCCUR OR BE NECESSARY IN CONSTRUCTION.
MINOR DETAILS NOT SHOWN.

REV	DATE	BY	CH
V	15MAY25	KRG	–
V	17MAR25	KRG	–
V	06MAR25	KRG	–
V	04MAR25	KRG	–
V	31JAN25	KRG	–

CHASSIS DATA | MAKE: PIERCE | MODEL: ENFORCER

Pierce MANUFACTURING INC.

TITLE: 2000-D-750 GAL POLY, 214" PUC RESCUE LADDERS THRU TANK, GENERATOR

FOR: LIONVILLE FIRE COMPANY, LIONVILLE, PA

DWG NO.: PRELIMINARY PRINT ONLY

PROPOSAL	800
SCALE 1:24	DATE
DRAWN BY KRG	24JAN2025
CHECKED BY N/A	N/A
SHEET SIZE D	SHEET NO. 1 OF 1