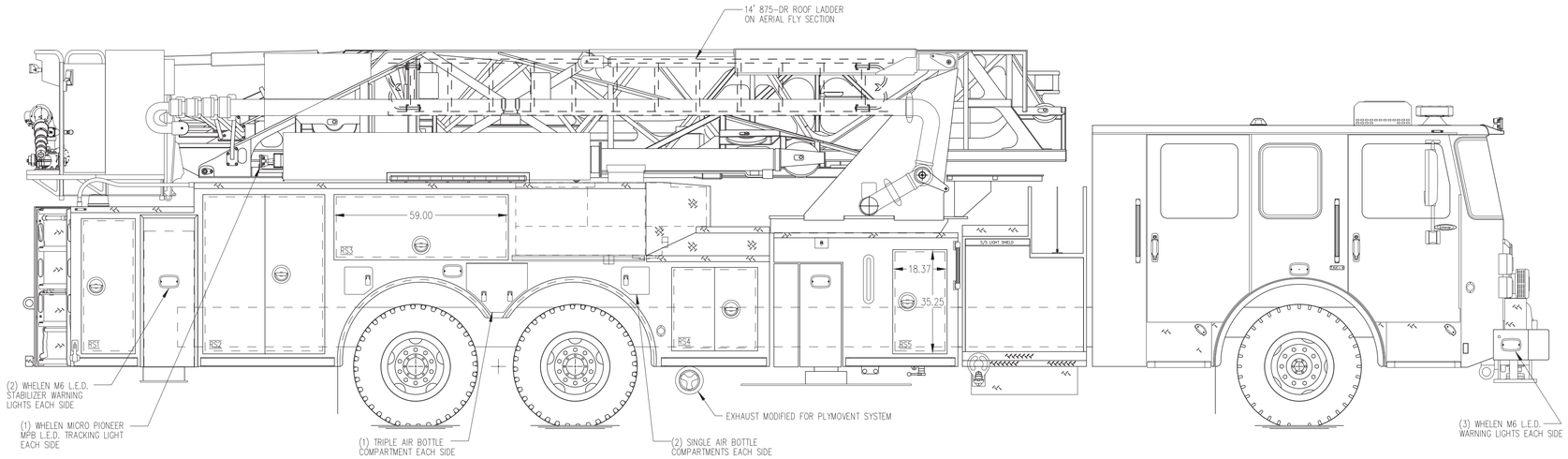

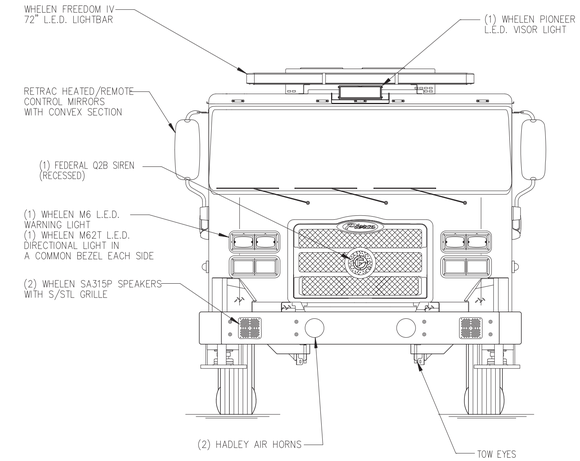

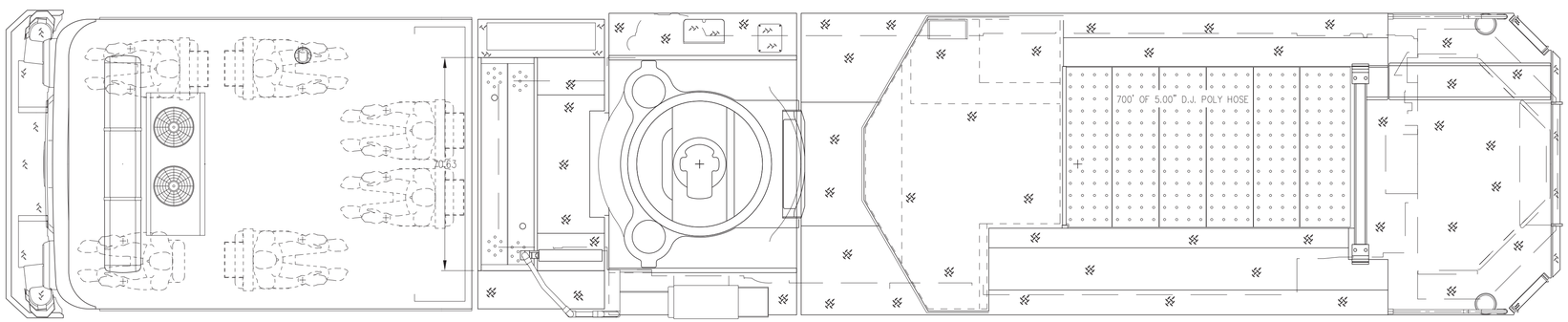

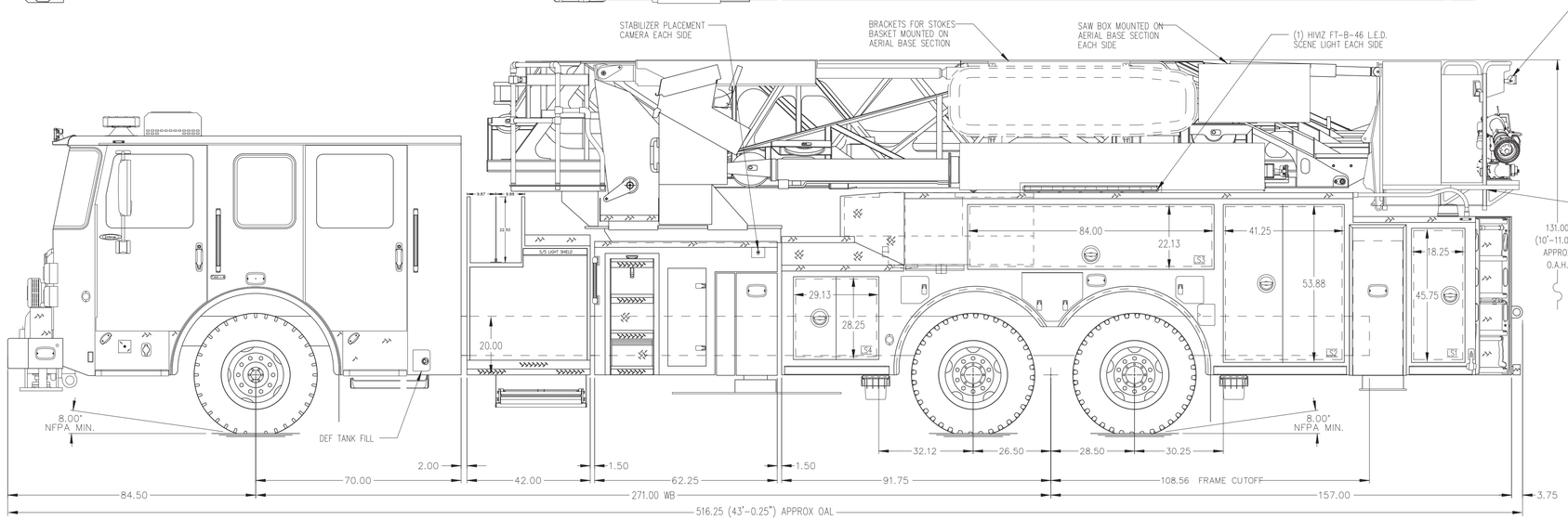

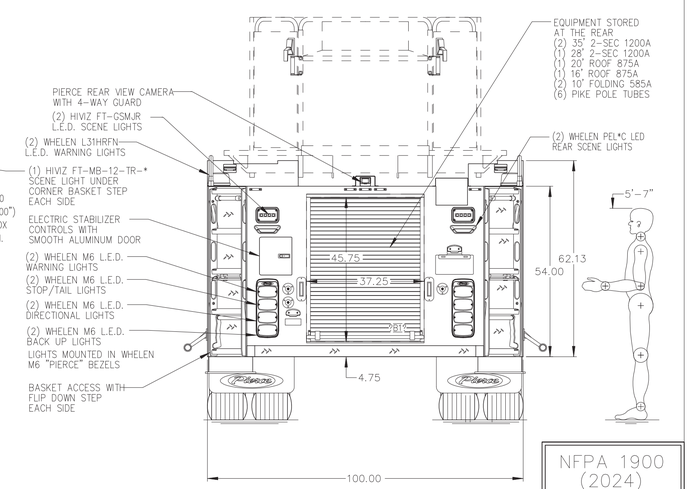

NFPA 1900
(2024)
COMPLIANT

ALUMINUM BODY

SIDE ROLL AND FRONTAL IMPACT PROTECTION

NOTE

DIMENSIONS SHOWN ARE APPROXIMATE AND ARE SUBJECT TO MINOR DEVIATIONS AS MAY OCCUR OR BE NECESSARY IN CONSTRUCTION.
MINOR DETAILS NOT SHOWN.

1. SHORELINE RECEPTACLE WITH KUSSMAUL SUPER AUTO-EJECT LOCATED ON DRIVER SIDE STEPWELL
2. AIR INLET WITH DISCONNECT COUPLING IN A RECESSED ALUMINUM TREADPLATE BOX IN THE DRIVER SIDE STEPWELL
3. BATTERY CHARGER LOCATED IN CAB BEHIND DRIVER'S SEAT
4. BATTERY CHARGER INDICATOR LOCATED ON DRIVER'S SEAT RISER
5. DUAL LIGHT STRIPS LOCATED IN COMPARTMENTS PER ORDER
6. RUNG LIGHTING ON AERIAL LADDER
7. 2-WAY INTERCOM SYSTEM BETWEEN AERIAL TIP AND TURNTABLE
8. NON-RAISED AERIAL PEDESTAL
9. DC POWER TO AERIAL TIP
10. 3-in-1 LYFECOMBO BRACKETS AT AERIAL BASKET

REV	DATE	BY	CH
▽	-	-	-

CHASSIS DATA	TITLE	100' ASCENDANT AERIAL TOWER AND BODY ASSEMBLY 300 GALLON WATER TANK	
MAKE PIERCE	FOR	ELLWOOD CITY FIRE DEPARTMENT ELLWOOD CITY, PENNSLYVANIA	
MODEL ENFORCER	DWG NO.	PRELIMINARY PRINT ONLY	

Pierce MANUFACTURING INC.

PROPOSAL	1062
SCALE 1:24	DATE
DRAWN BY KRG	13MAR2025
CHECKED BY N/A	N/A
SHEET SIZE D	SHEET NO. 1 OF 1