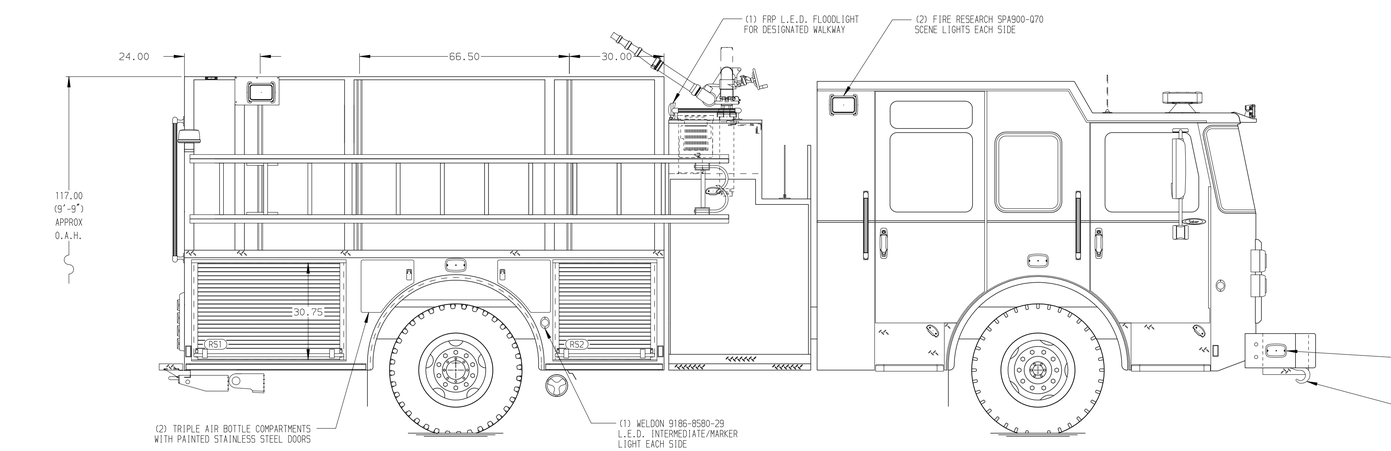

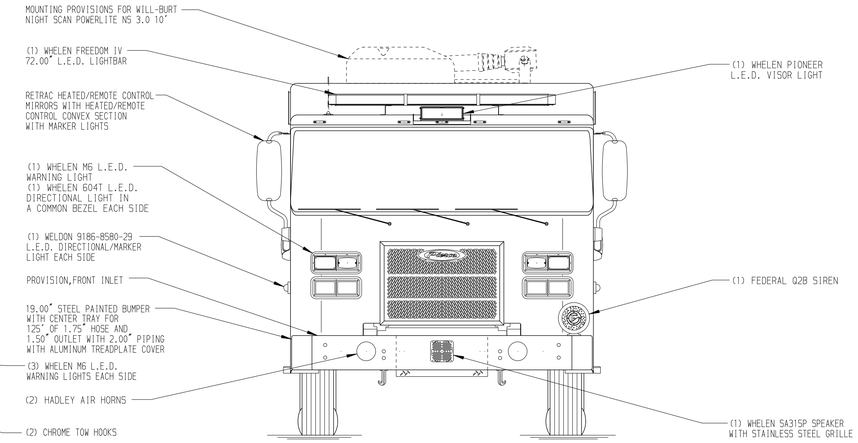

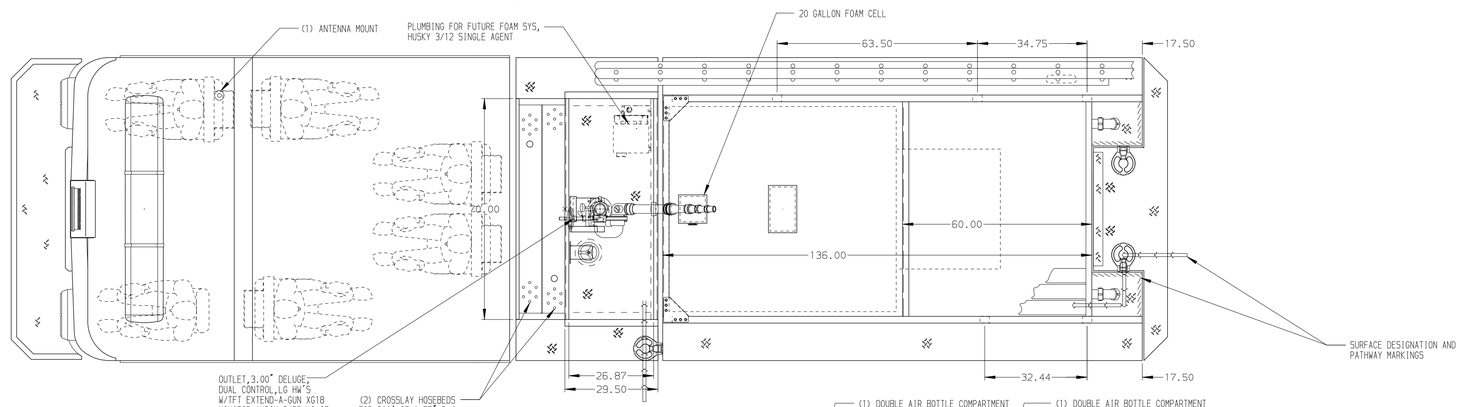

HOSEBED CAPACITIES

1. 500' OF 5.00" D.J. POLY HOSE
2. 500' OF 5.00" D.J. POLY HOSE
3. 500' OF 2.50" D.J. POLY HOSE

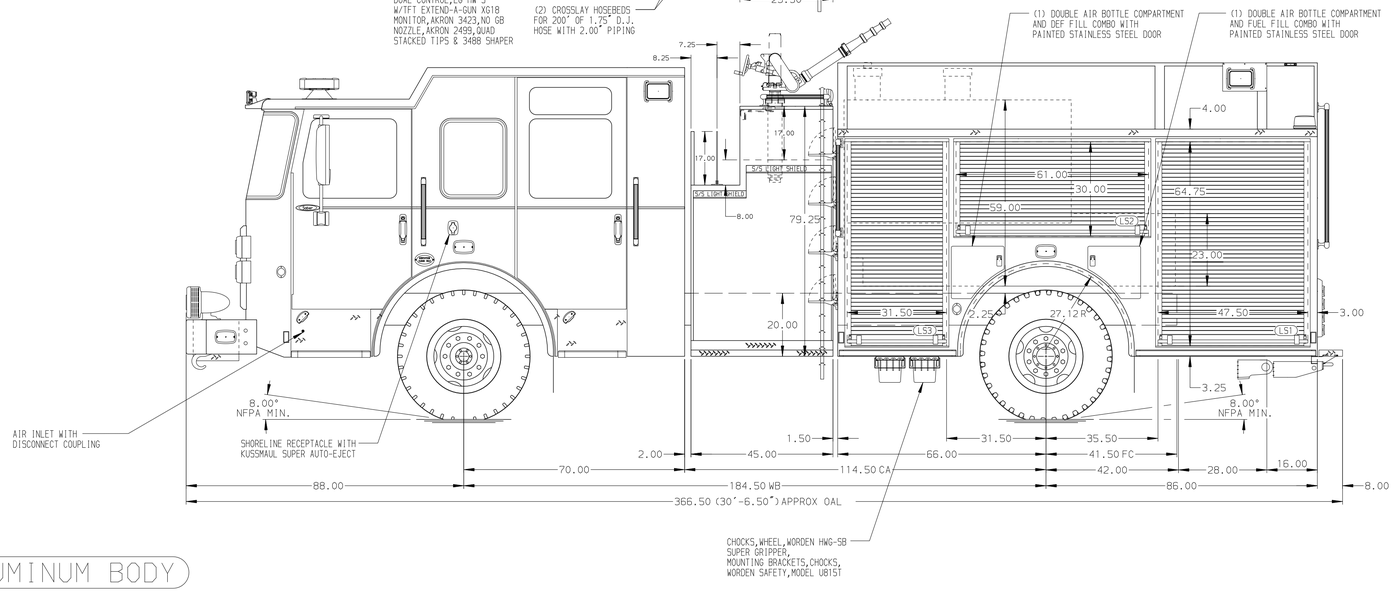

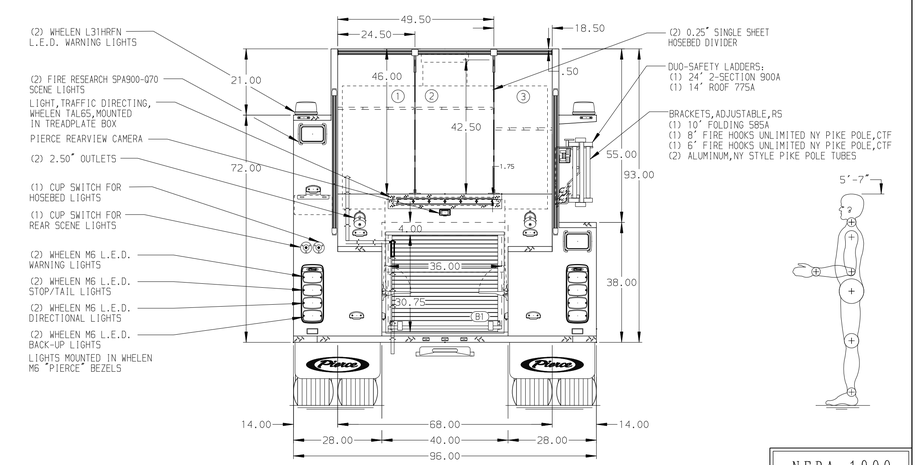

NFPA 1900 (2024) COMPLIANT

ALUMINUM BODY

NOTE

DIMENSIONS SHOWN ARE APPROXIMATE AND ARE SUBJECT TO MINOR DEVIATIONS AS MAY OCCUR OR BE NECESSARY IN CONSTRUCTION.
MINOR DETAILS NOT SHOWN.

REV	DATE	BY	CH
3	20AUG25	RHU	CGA
2	23MAY25	ADP	CCS
1	20MAR25	VHO	EEM

CHASSIS DATA
MAKE: PIERCE
MODEL: SABER FR

Pierce MANUFACTURING INC.

TITLE: 1500GPM, 1000G TANK, 980G WATER, 20G FOAM
152" PUMPER BODY 2G, HARDWIRED

FOR: FRANKLIN CITY
FRANKLIN,PENNSYLVANIA

DWG NO.: 44086AD

JOB NO.	44086
SCALE	1:24
DATE	
DRAWN BY	VHO 13MAR25
CHECKED BY	EEM 14MAR25
SHEET SIZE	D
SHEET NO.	1 OF 1

View File Created 20-AUG-2025 13:08:25