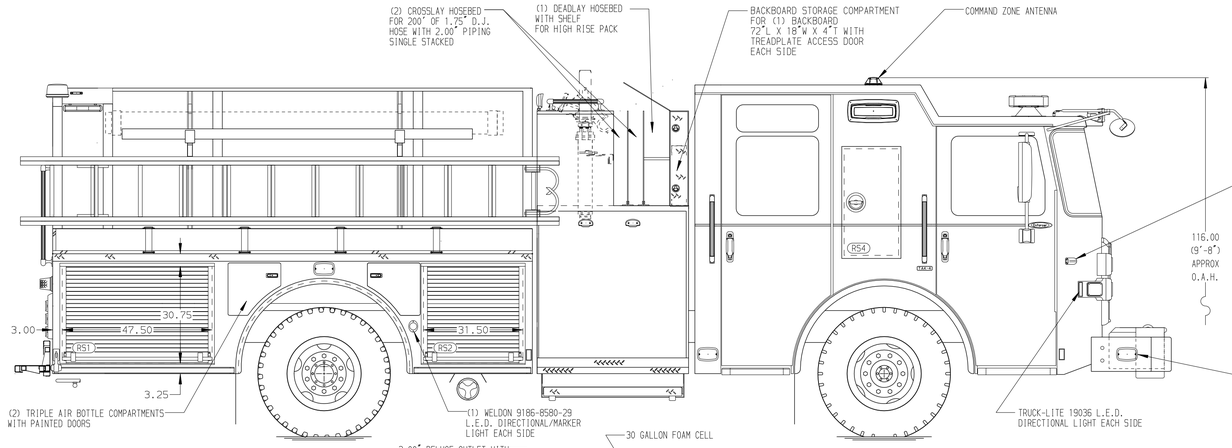

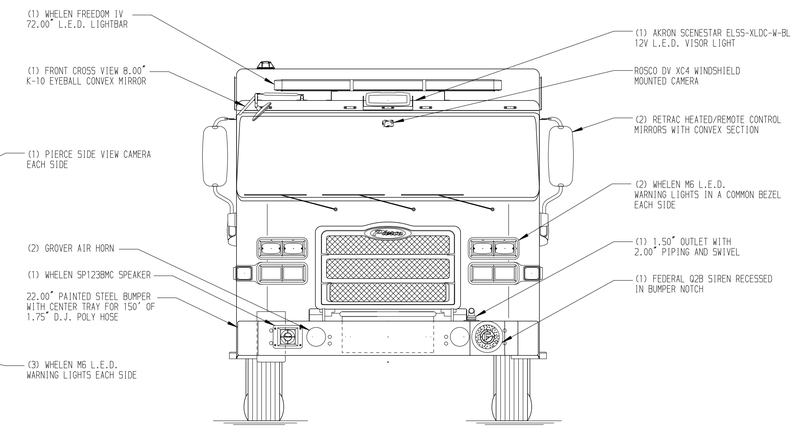

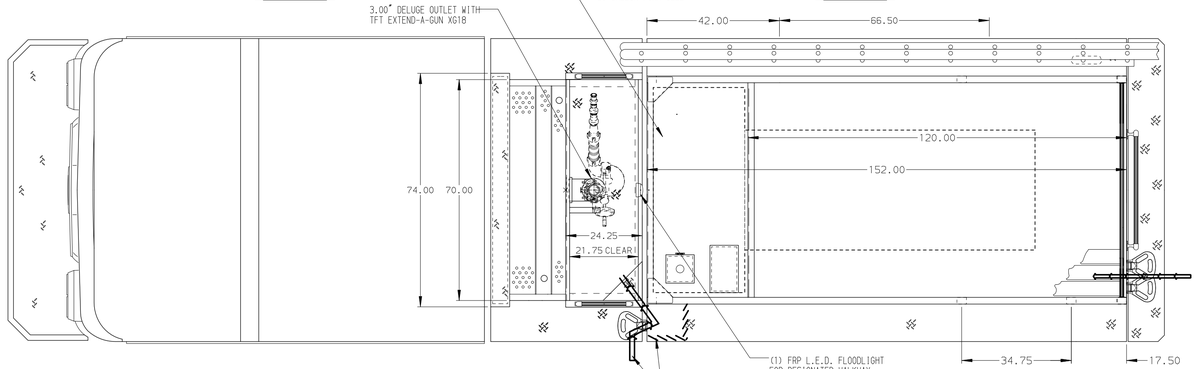

HOSEBED CAPACITIES

1. 300' OF 2.50" D.J. POLY HOSE
2. 300' OF 1.75" D.J. POLY HOSE
3. 1200' OF 5.00" D.J. POLY HOSE
4. 800' OF 2.50" D.J. POLY HOSE
5. 600' OF 3.00" D.J. POLY HOSE

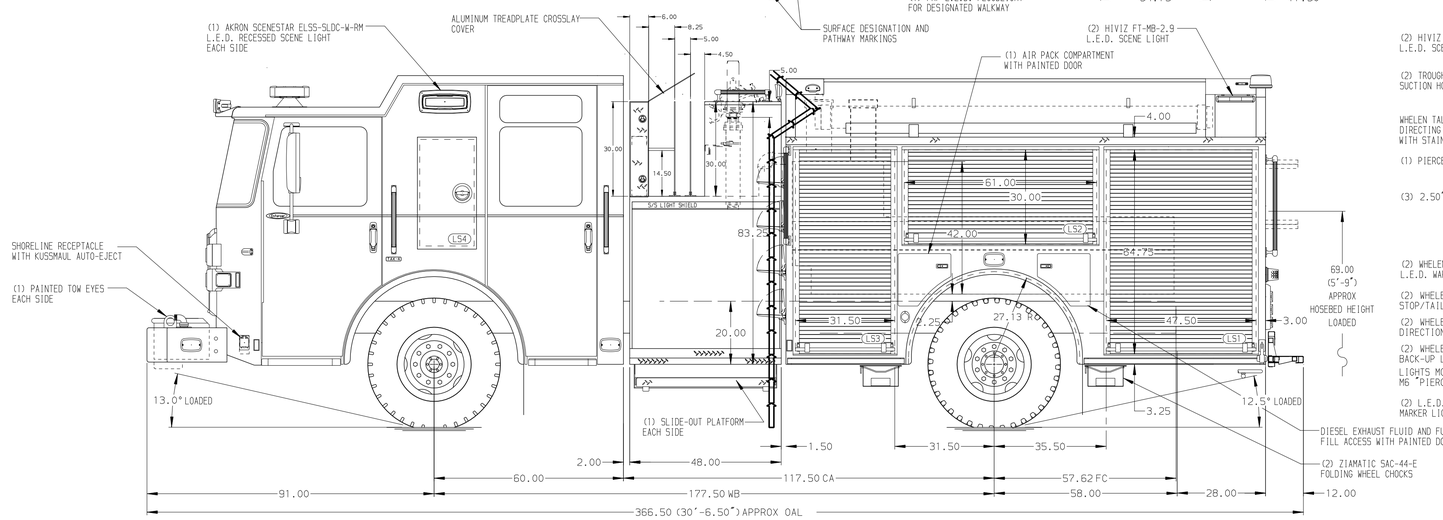

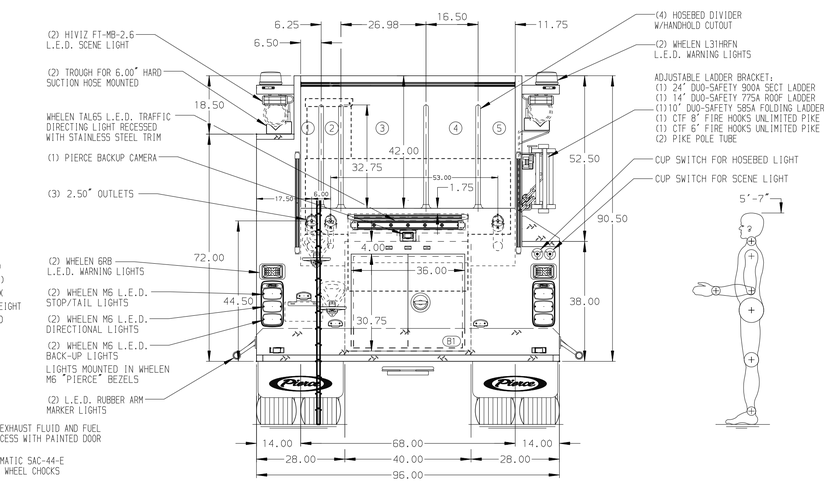

ALUMINUM BODY

SIDE ROLL AND FRONTAL IMPACT PROTECTION

NOTE

DIMENSIONS SHOWN ARE APPROXIMATE AND ARE SUBJECT TO MINOR DEVIATIONS AS MAY OCCUR OR BE NECESSARY IN CONSTRUCTION.
MINOR DETAILS NOT SHOWN.

1. ONSPOT AUTOMATIC TIRE CHAINS TO BE PROVIDED AT REAR
2. ROSCO DV XC4 DUAL FORWARD AND INTERIOR CAMERA MOUNTED INSIDE OF FRONT WINDSHIELD
3. BATTERY CHARGER INDICATOR LOCATED ON DRIVER'S SEAT RISER
4. ELASTIC PULL STRAP ON DOOR IN COMPARTMENTS; LS1,LS2 & LS3
5. DRIP PAN GUARD FOR ROLL-UP DOOR LOCATED ON COMPARTMENTS; LS1,LS2,LS3,RS1 & RS2
6. ONE FULL WIDTH/DEPTH ADJUSTABLE SHELF IN COMPARTMENTS; LS1 & LS3
7. PARTITION BETWEEN COMPARTMENTS LS1/B1 AND RS1/B1
8. AKRON EDUCTOR 3096-95 FOAM SYSTEM
9. 120V DUPLEX RECEPTACLE LOCATED IN COMPARTMENTS; LS3 & RS2

REV	DATE	BY	CH
7	18JUN21	JWO	DTS
6	01JUN21	JWO	CDU
5	28MAY21	JWO	DTS
4	11MAR21	JRC	CDU

CHASSIS DATA
MAKE: PIERCE
MODEL: ENFORCER

Pierce MANUFACTURING INC.

TITLE: 1500-D-530P, 500G WATER 30G FOAM, 152" PUMPER BODY (3) CROSSLAYS, RIGHT SIDE LADDER BRACKET, DELUGE
FOR: BETHLEHEM CITY FIRE DEPARTMENT, BETHLEHEM, PENNSYLVANIA
DWG NO.: 36004AD

JOB NO.	36004
SCALE	1:24
DATE	
DRAWN BY	JRC 01MAR21
CHECKED BY	CDU 2MAR21
SHEET SIZE	D
SHEET NO.	1 OF 1

View File Created 21-JUN-2021 10:07:55