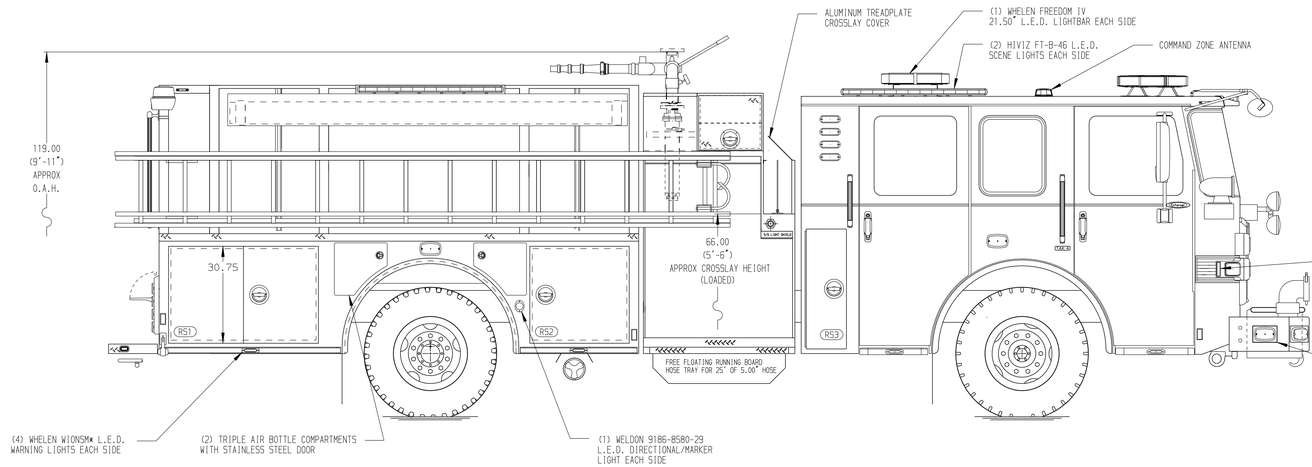

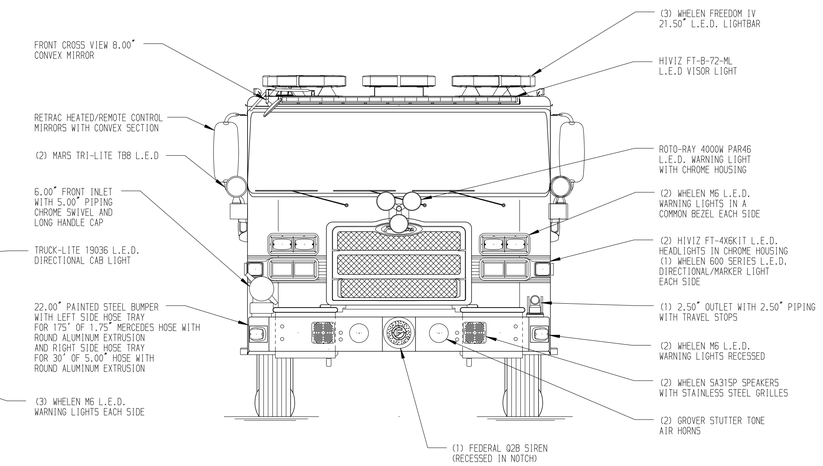

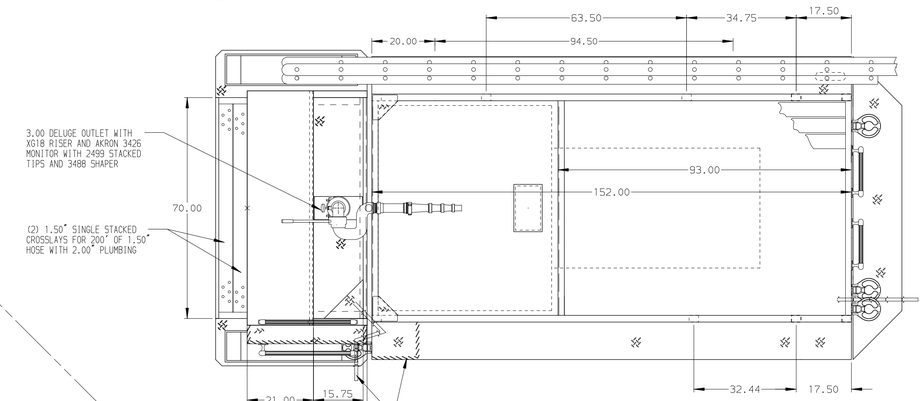

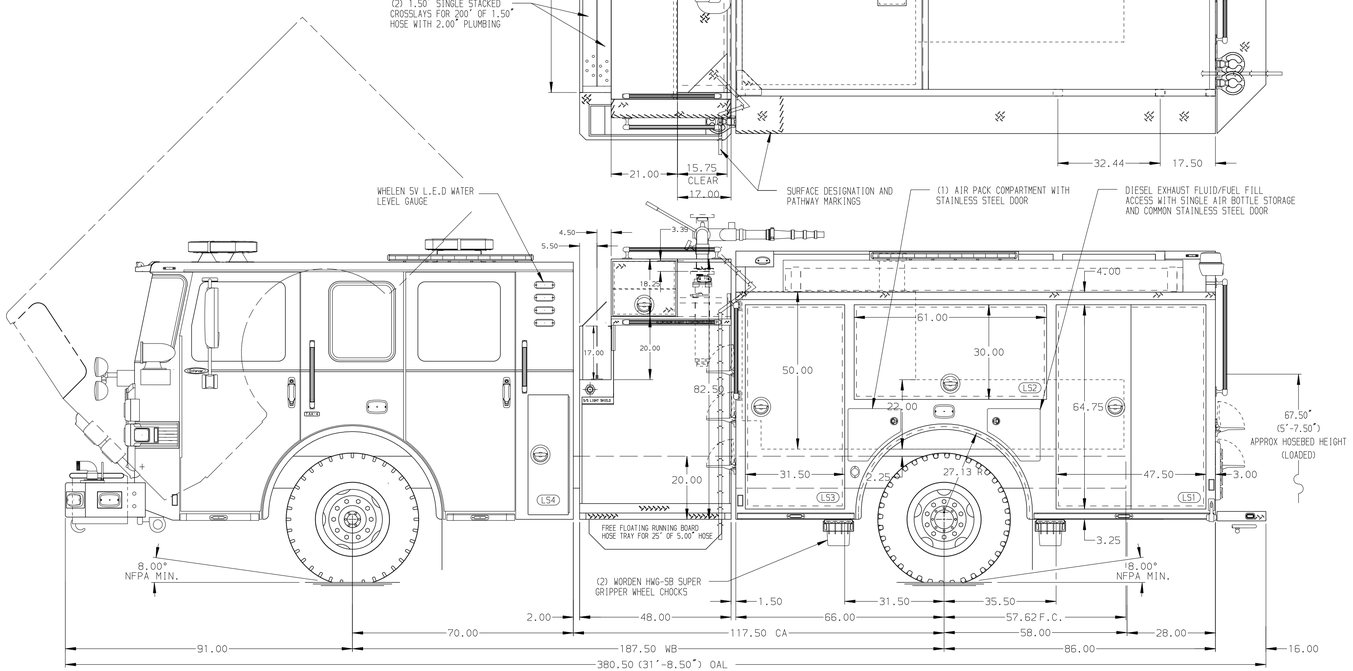

HOSEBED CAPACITIES

1. 400' OF 1.75" MERCEDES AQUAFLOW HOSE
2. 600' OF 3.00" MERCEDES AQUAFLOW HOSE
3. 1500' OF 5.00" MERCEDES AQUAFLOW HOSE
4. 300' OF 2.50" MERCEDES MEGAFLOW HOSE
5. 300' OF 1.75" MERCEDES AQUAFLOW HOSE
6. 300' OF 1.75" MERCEDES AQUAFLOW HOSE

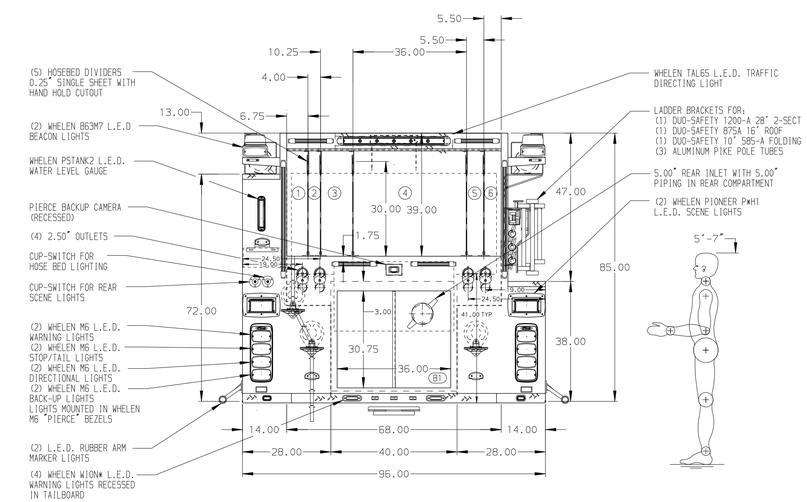

ALUMINUM BODY

SIDE ROLL AND FRONTAL IMPACT PROTECTION

NOTE

DIMENSIONS SHOWN ARE APPROXIMATE AND ARE SUBJECT TO MINOR DEVIATIONS AS MAY OCCUR OR BE NECESSARY IN CONSTRUCTION.
MINOR DETAILS NOT SHOWN.

1. ONSPOT AUTOMATIC TIRE CHAINS TO BE PROVIDED AT REAR
2. BATTERY CHARGER LOCATED BEHIND DRIVER'S SEAT
3. BATTERY CHARGER INDICATOR LOCATED ON DRIVER'S SEAT RISER
4. DUAL L.E.D. LIGHT STRIPS LOCATED IN HOSE BED
5. STAINLESS STEEL SCUFFPLATE ON BODY REAR CORNERS
6. REVERSED HINGED DOOR ON COMPARTMENT LS3
7. ONE FULL WIDTH/DEPTH ADJUSTABLE SHELF IN COMPARTMENTS LS1, LS2, LS3
8. ONE ADJUSTABLE VERTICAL PARTITION IN COMPARTMENT B1
9. ALUMINUM PEGBOARD ON BACK WALL COMPARTMENTS LS1, LS3
10. SHORELINE RECEPTACLE LOCATED IN DS STEP WELL

REV	DATE	BY	CH
1	16MAR21	JWO	DTS
0	04FEB21	JWO	DTS

CHASSIS DATA — MAKE: PIERCE — MODEL: ENFORCER

Pierce MANUFACTURING INC.

TITLE: 2000-D-750 GAL POLY, 152" FH FDLER L.S., LOW FDLER R.S., LADDER BRACKETS, (2) X-LAYS, DELUGE

FOR: DOVER TOWNSHIP FIRE DEPARTMENT, DOVER, PA

DWG NO.: 35614AD

JOB NO.	SCALE	DRAWN BY	CHECKED BY	SHEET SIZE	SHEET NO.
35614	1:24	CDU	KOU	D	1 OF 1
	DATE	26OCT20	26OCT20		

View File Created 16-MAR-2021 11:30:06