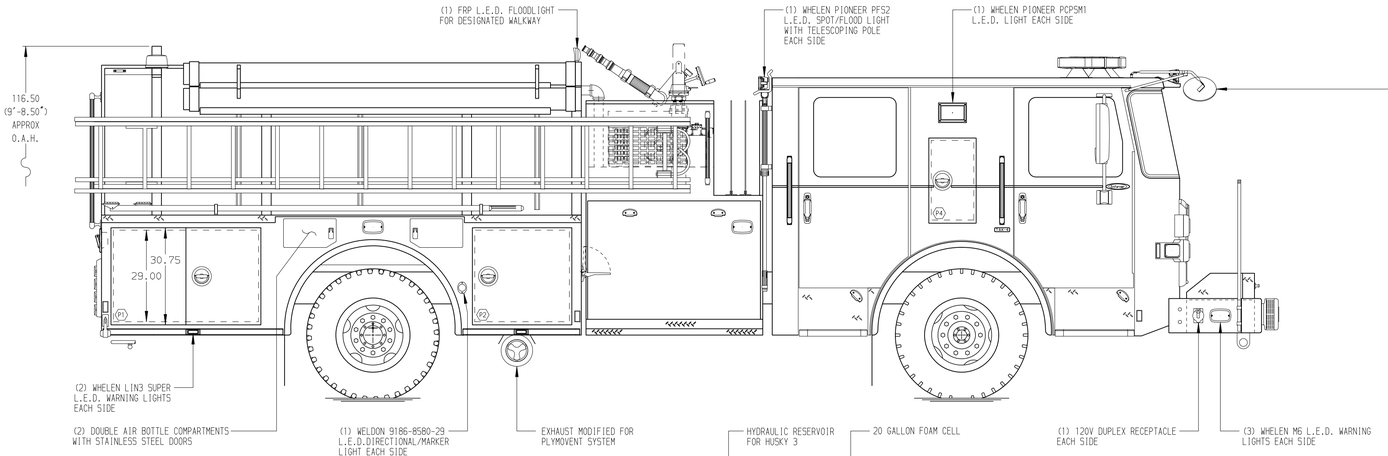

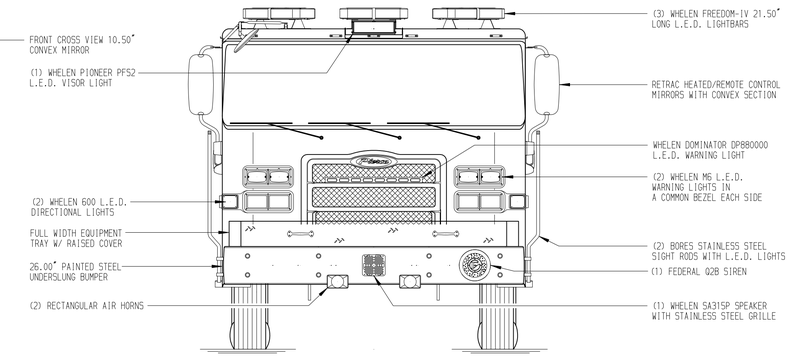

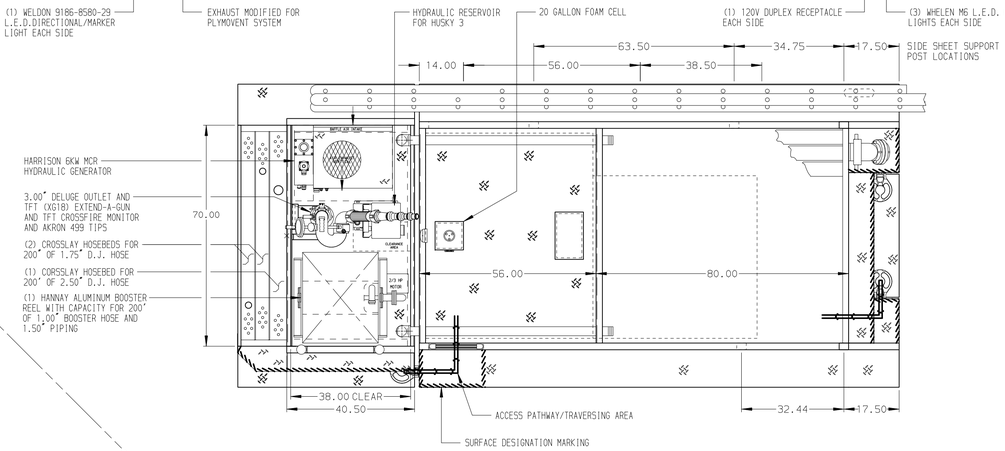

HOSEBED CAPACITIES

1. 200' OF 2.50" D.J. HOSE
2. 1200' OF 5.00" RUBBER LDH
3. 600' OF 3.00" D.J. HOSE
4. 200' OF 2.50" D.J. HOSE

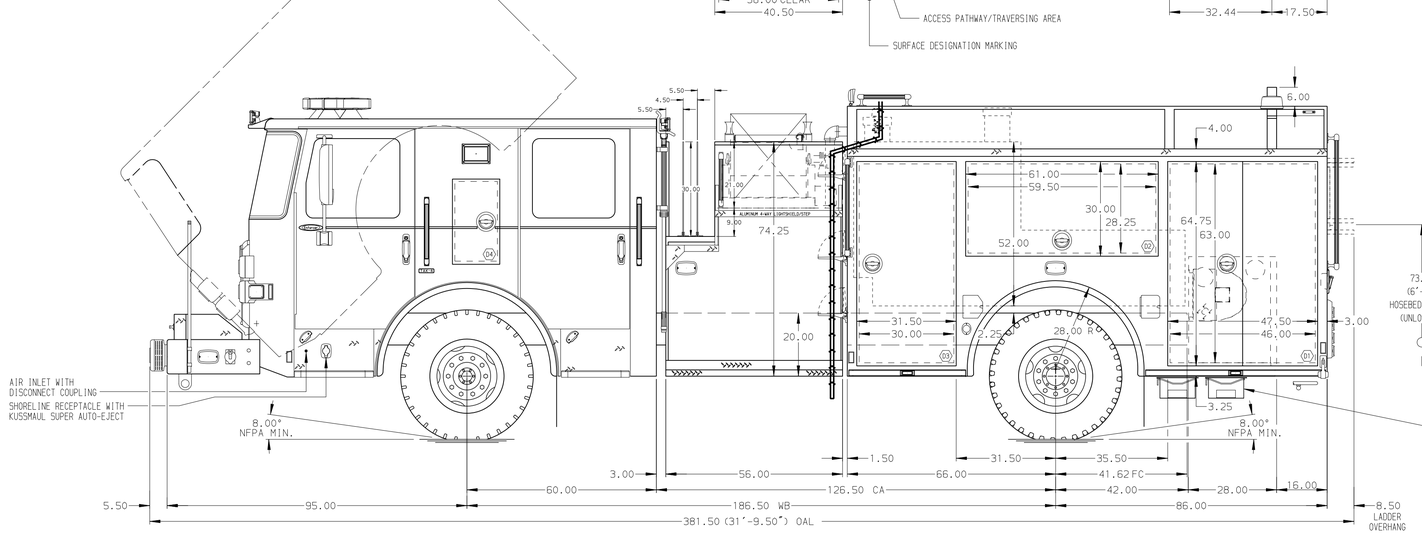

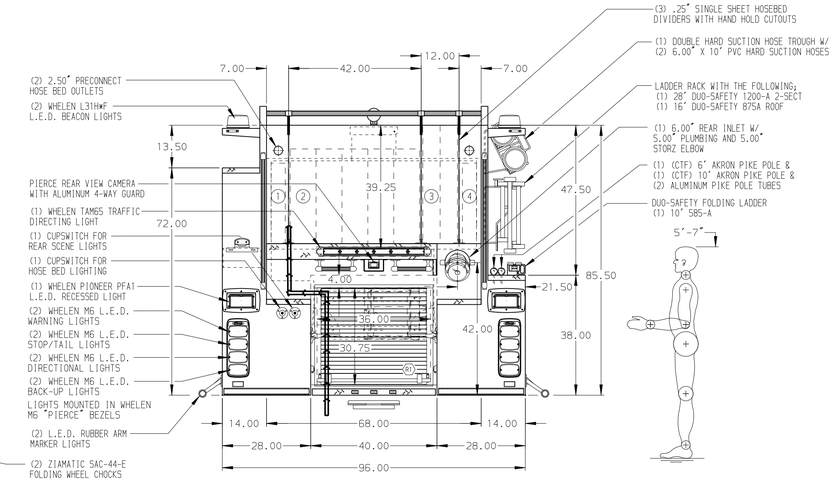

ALUMINUM BODY

NOTE

DIMENSIONS SHOWN ARE APPROXIMATE AND ARE SUBJECT TO MINOR DEVIATIONS AS MAY OCCUR OR BE NECESSARY IN CONSTRUCTION.
MINOR DETAILS NOT SHOWN.

1. ONSPOT AUTOMATIC TIRE CHAINS TO BE PROVIDED AT REAR
2. BATTERY CHARGE INDICATOR LOCATED ON DRIVER'S SEAT RISER
3. ONE PULL STRAP ON DOOR IN COMPARTMENT D2
4. REVERSED HINGED DOOR ON COMPARTMENT D3
5. ONE FLOOR MOUNTED SLIDE-OUT TRAY IN COMPARTMENTS D1, P1, AND R1
6. ANGLED ALUMINUM TREADPLATE FOR CRIBBING LOCATED IN COMPARTMENT P3
7. ALUMINUM PEGBOARD WITH TRACKS ON THE REAR WALL OF COMPARTMENTS D2 & D3
8. ALUMINUM PEGBOARD WITH TRACKS ON THE SIDE WALLS OF COMPARTMENT D3
9. CIRCUIT BREAKER PANEL IN COMPARTMENT D3
10. ONE AKRON ERWC-15-10 CABLE REEL WITH ELECTRIC REWIND LOCATED IN COMPARTMENT R1
11. ONE FULL WIDTH / DEPTH ADJUSTABLE TRAY IN COMPARTMENT (TBD)
12. SENTREX 6-PLACE RECEPTACLE STRIP LOCATED BEHIND DRIVER'S SEAT

CUSTOMER APPROVAL

APPROVED BY: _____

DATE: _____

REV	DATE	BY	CH
▽	19AUG16	GVH	-

CHASSIS DATA — MAKE: PIERCE — MODEL: ENFORCER

Pierce MANUFACTURING INC.

TITLE: 1500-D-730P, W/20G FOAM, 152" FH FDLER DS / LOW PS SIDE CONTROL, DELUGE, GENERATOR, BOOSTER REEL

FOR: OLD LYCOMING TWP. FIRE CO. WILLIAMSPORT, PENNSYLVANIA

DWG NO.: 30468AD

JOB NO.	SCALE	DRAWN BY	CHECKED BY	SHEET SIZE	SHEET NO.
30468	1:24	GVH	CSH	D	1 OF 1

DATE: 15AUG16 15AUG16