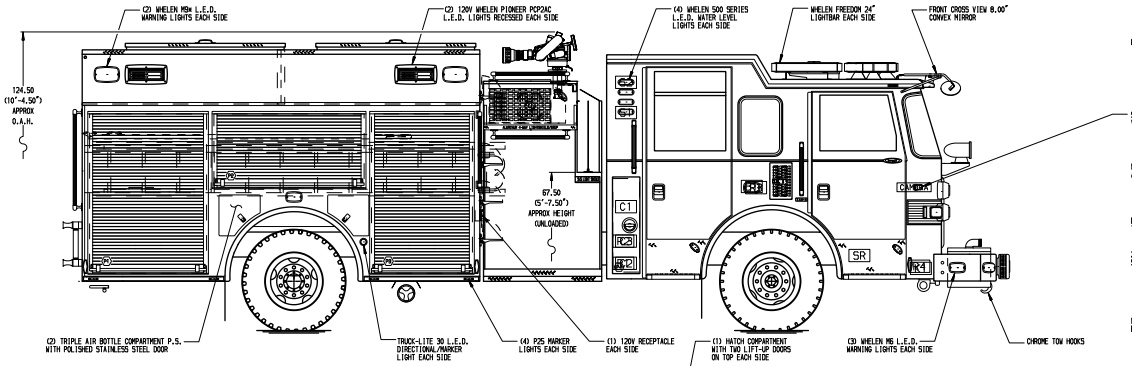

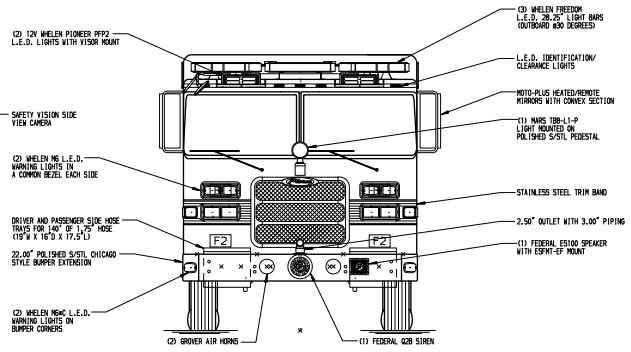

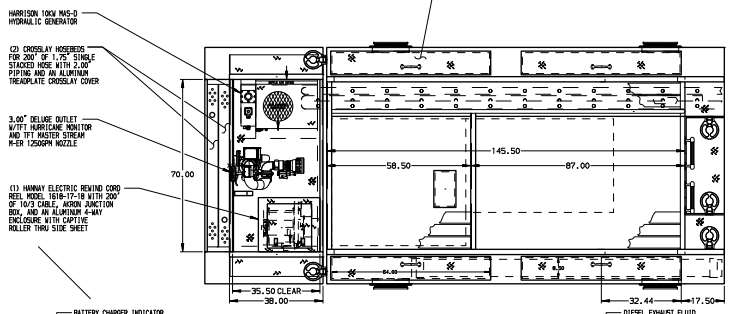

HOSEBED CAPACITIES

1. 150' OF 1.75" D.J. HOSE (TOP)
   200' OF 2.50" D.J. HOSE (BOTTOM)
2. 150' OF 1.75" D.J. HOSE (TOP)
   200' OF 2.50" D.J. HOSE (BOTTOM)
3. 1200' OF 5.00" D.J. HOSE
4. 200' OF 2.50" D.J. HOSE
5. 300' OF 2.50" D.J. HOSE

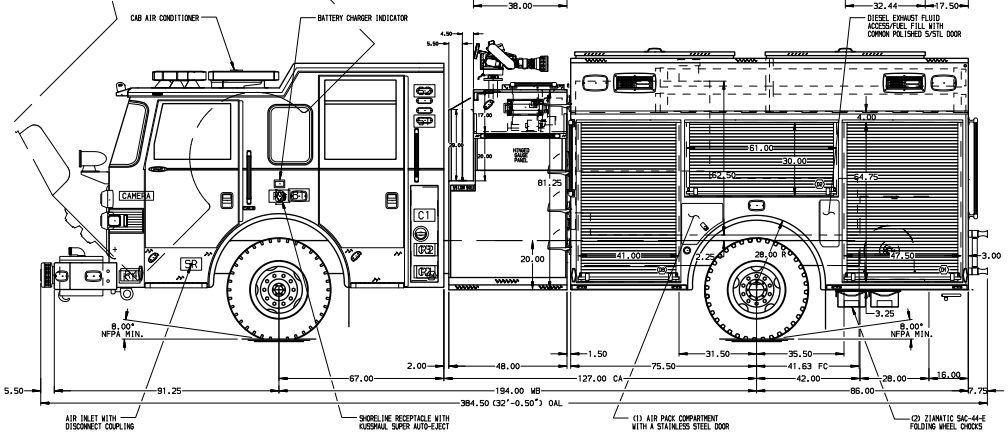

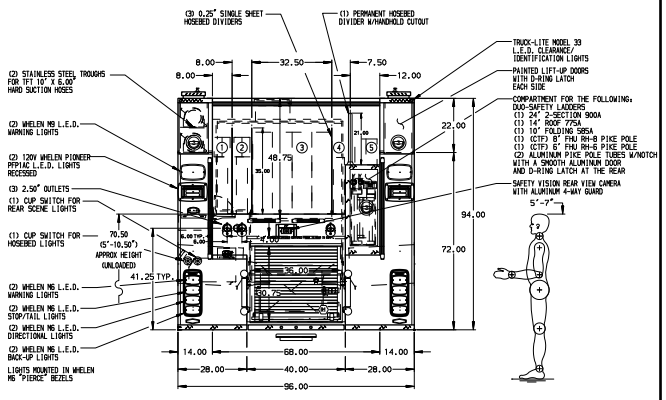

ALUMINUM BODY

SIDE ROLL AND FRONTAL IMPACT PROTECTION

NOTE

DIMENSIONS SHOWN ARE APPROXIMATE AND ARE SUBJECT TO MINOR DEVIATIONS AS MAY OCCUR OR BE NECESSARY IN CONSTRUCTION. MINOR DETAILS NOT SHOWN.

1. PUMP PANEL DRAWING REQUIRED
2. ONSPOT AUTOMATIC TIRE CHAINS TO BE PROVIDED AT REAR
3. ALUMINUM TREADPLATE EXTERIOR REAR WALL OF CAB
4. S/STL SCUFFPLATE ON EACH CAB DOOR JAMB
5. MOUNTING BASES FOR ANTENNAS LOCATED PER SHOP ORDER
6. KUSSMAUL BATTERY CHARGER/AIR COMPRESSOR LOCATED IN CREW CAB SEAT RISER
7. PERIMETER SCENE LIGHTS LOCATED PER SHOP ORDER
8. ONE 12V L.E.D. LIGHT STRIP LOCATED ON EACH SIDE IN THE HOSEBED
9. S/STL SCUFFPLATE ON REAR OUTER CORNER OF BODY
10. DRIP PAN GUARD FOR ALL ROLL-UP DOORS
11. PIERCE L.E.D. DUAL COMPARTMENT LIGHT STRIPS LOCATED PER SHOP ORDER
12. SHELF TRACK LOCATED IN ALL BODY COMPARTMENTS
13. ONE ADJUSTABLE SHELF (FULL DEPTH/FULL WIDTH) IN COMPARTMENT D1, D3, P1 & P3
14. SWING-OUT TOOL BOARD WITH PEGBOARD PATTERN IN COMPARTMENT P2
15. BOLT-IN PARTITION BETWEEN COMPARTMENTS D1/R1 AND P1/R1
16. ALUMINUM PEGBOARD WITH TRACKS ON THE REAR WALL OF COMPARTMENT D3
17. ALL FOLDING STEPS TO BE TRIDENT WITH INTEGRATED L.E.D. LIGHT UNLESS SPECIFIED
18. PIERCE LOGO MUDFLAPS FRONT AND REAR
19. CIRCUIT BREAKER PANEL IN COMPARTMENT D3
20. STAINLESS STEEL FENDER CROWNS FRONT AND REAR
21. DRAIN HOLE WITH SPLASH GAURD LOCATED IN COMPARTMENT D1, D3, P1 & P3, TWO IN R1
22. ONE HANWAY BOOSTER REEL MODEL EF34-23-24 WITH CAPACITY FOR 200' OF 1.00" HOSE AND 2.00" PIPING LOCATED IN COMPARTMENT R1
23. ONE 120V DUPLEX RECEPTACLE IN THE EMS COMPARTMENT AND COMPARTMENT D2, TWO IN THE CAB

REV	DATE	BY	CH
1	130CT14	DDO	DTS
2	09SEP14	DDO	DTS
3	15AUG14	DDO	CSH

CHASSIS DATA
MAKE: PIERCE
MODEL: ARROW-XT

Pierce MANUFACTURING INC.

TITLE: 2000-D-750P, 161" FH FDLER BODY, SIDE CONTROL (2) XLAYS, LADDERS BESIDE TANK, DELUGE, GENERATOR

FOR: LANCASTER TOWNSHIP FIRE DEPARTMENT, LANCASTER, PA

DWG NO. 28161AD

JOB NO. 28161

SCALE 1:24

DATE

DRAWN BY DDO 07AUG14

CHECKED BY CSH 07AUG14

SHEET SIZE D

SHEET NO. 1 OF 1

View File Created 26-NOV-2014 10:07:53