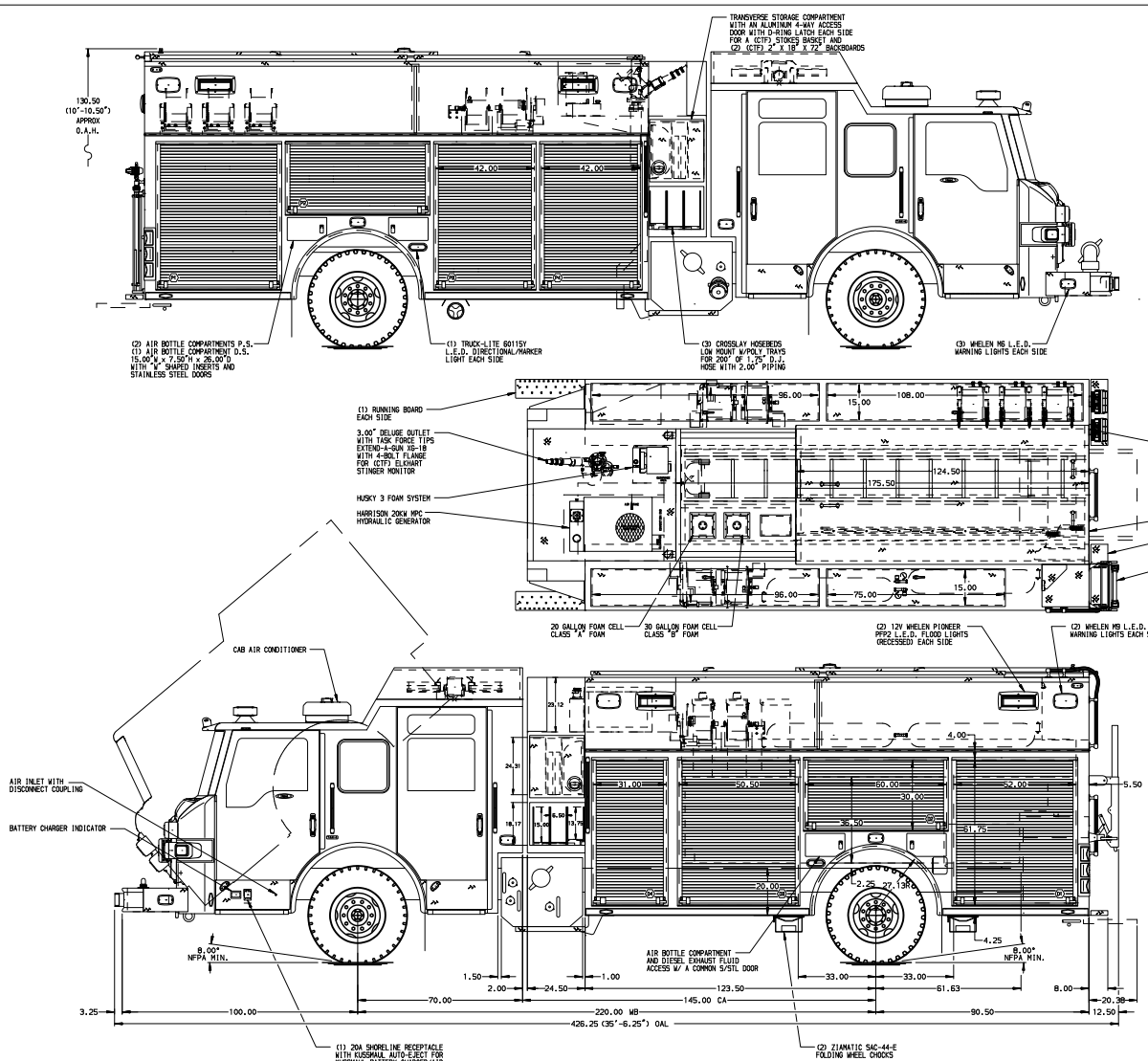

ALUMINUM BODY

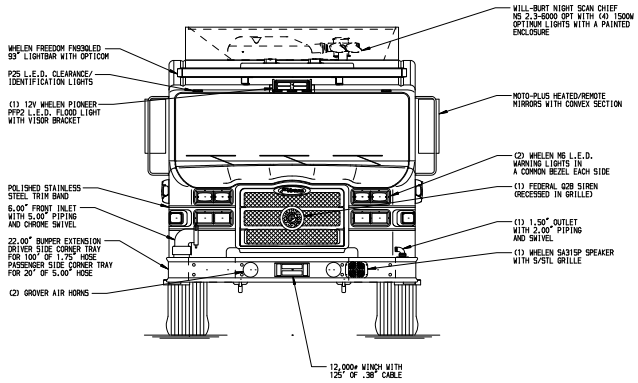

HOSEBED CAPACITIES

1. 300' OF 1.75" D.J. POLY HOSE
2. 300' OF 2.50" D.J. POLY HOSE
3. 1000' OF 5.00" D.J. POLY HOSE
4. 300' OF 3.00" D.J. POLY HOSE
5. 300' OF 1.75" D.J. POLY HOSE

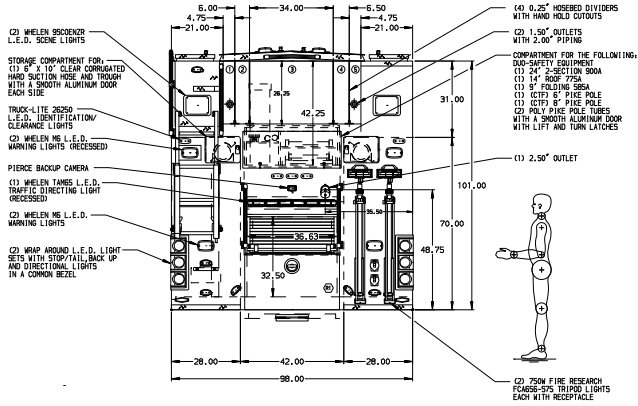

NOTE

DIMENSIONS SHOWN ARE APPROXIMATE AND ARE SUBJECT TO MINOR DEVIATIONS AS MAY OCCUR OR BE NECESSARY IN CONSTRUCTION. MINOR DETAILS NOT SHOWN.

1. ONSPOT AUTOMATIC TIRE CHAINS TO BE PROVIDED AT REAR
2. S/STL SCUFFPLATE ON EACH CAB DOOR JAMB
3. MOUNTING BASE FOR ANTENNA LOCATED PER SHOP ORDER
4. KUSSMAUL PUMP PLUS 1000 BATTERY CHARGER/AIR COMPRESSOR LOCATED BEHIND DRIVER'S SEAT
5. PERIMETER SCENE LIGHTS LOCATED PER SHOP ORDER
6. PIERCE L.E.D. COMPARTMENT DUAL LIGHT STRIPS LOCATED PER SHOP ORDER
7. 250# OIL DRY HOPPER IN HATCH COMPARTMENT ABOVE P4
8. ONE VERTICAL BOLT-IN PARTITION BETWEEN COMPARTMENTS D1-R1 & P1-R1
9. STAINLESS STEEL FENDER CROWNS FRONT AND REAR
10. PIERCE LOGO MUDFLAPS FRONT AND REAR
11. REINFORCED FLOOR IN D.S. HATCH COMPARTMENTS FOR ASME BOTTLES
12. FLOOR ABOVE ASME BOTTLES IN D.S. HATCH COMPARTMENT
13. HUSKY 3 SINGLE AGENT FOAM SYSTEM
14. CIRCUIT BREAKER PANEL IN COMPARTMENT D3
15. ONE HANNAY ELECTRIC REWIND CABLE REEL 1618-17-18 WITH 200' OF 10/3 CABLE AND AKRON JUCTION BOX IN HATCH COMPARTMENT ABOVE D3 & P3
16. ONE 30A, 240V RECEPTACLE IN PS HATCH COMPARTMENT FORWARD OF HYDRAULIC REELS
17. TWO 6000 PSI ASME BOTTLES FOR TOOL AIR LOCATED IN D.S. HATCH COMPARTMENT
18. TOOL AIR CONTROL PANEL LOCATED IN COMPARTMENT D3
19. TWO AMDOR LUMABAR L.E.D. H20 LIGHTS BELOW HOSEBED COVER
20. ONE HANNAY ELECTRIC REWIND AIR REEL 1516-17-18 WITH 200' OF 0.51" O.D. HIGH PRESSURE HOSE IN HATCH COMPARTMENT ABOVE D3 & P3
21. THREE ELECTRIC REWIND HURST LOW PRESSURE HYDRAULIC HOSE REELS WITH 100' OF HURST TWIN HOSE IN HATCH COMPARTMENT ABOVE P1
22. ONE PAINTED ADJ FULL WIDTH/DEPTH SHELF IN COMPTS. P1 & P2, TWO IN D1, D3, P3 & R1
23. ONE PAINTED SWING-OUT ALUMINUM PEGBOARD TOOLBOARD IN COMPARTMENT D2
24. ONE VERTICAL DIVIDER IN COMPARTMENT D3
25. ONE FULL WIDTH/DEPTH SLIDE-OUT FLOOR TRAY IN COMPARTMENTS D3 & P1
26. ONE PAINTED SLIDE-OUT ALUMINUM PEGBOARD TOOLBOARD IN COMPARTMENT P4
27. ONE PAINTED ADJUSTABLE FULL WIDTH/DEPTH SLIDE-OUT/TILT TRAY IN COMPARTMENT P1

REV	DATE	BY	CH
7	14JAN13	NPA	DTS
6	03DEC12	NPA	DTS

CUSTOMER APPROVAL

APPROVED BY: _____

DATE: _____

Pierce MANUFACTURING INC.

CHASSIS DATA	
MAKE	PIERCE
MODEL	IMPEL
TITLE	1500-D-750P, 700G WATER W/20G & 30G FOAM, 214" PUC (3) XLAYS, LADDERS BELOW HOSEBED, DELUGE, GENERATOR
FOR	NEVERSINK FIRE COMPANY LEBANON, PENNSYLVANIA
DWG NO.	26398AD
JOB NO.	26398
SCALE	1:24
DATE	160CT12
DRAWN BY	NPA
CHECKED BY	CSH
SHEET SIZE	D
SHEET NO.	1 OF 1

View File Created 15-JAN-2013 10:28:54