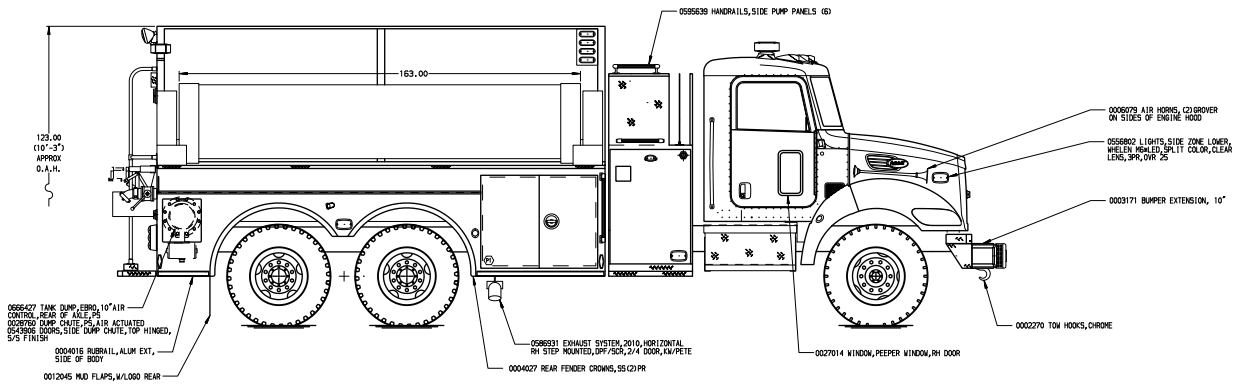

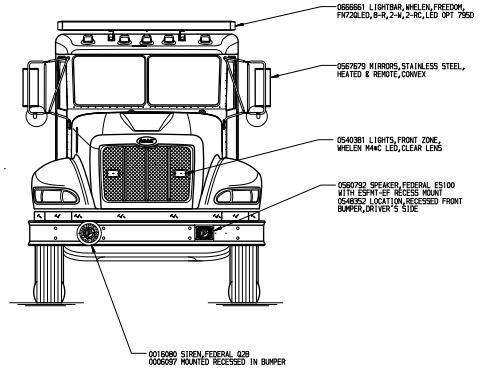

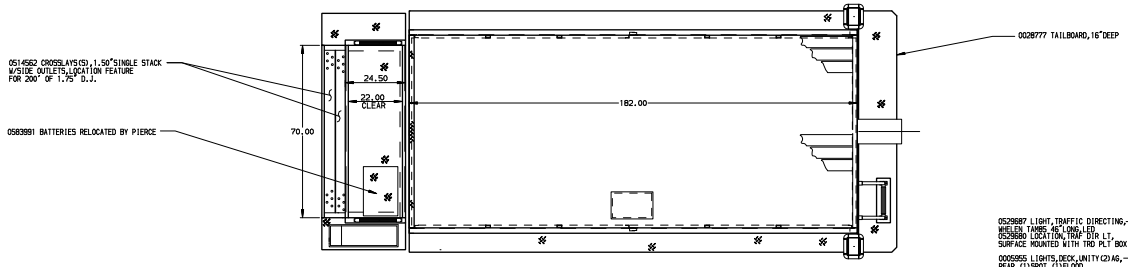

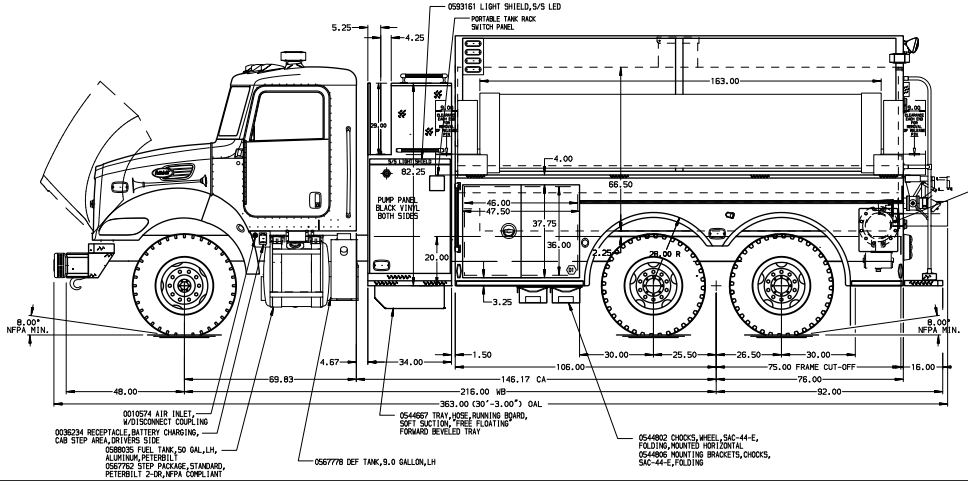

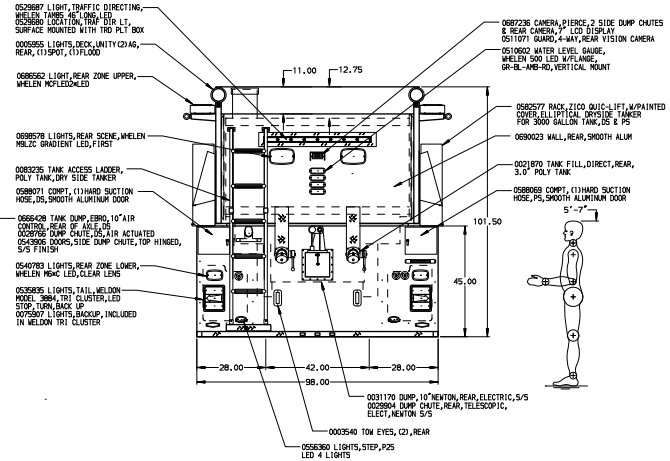

ALUMINUM BODY

NOTE
DIMENSIONS SHOWN ARE APPROXIMATE AND ARE SUBJECT TO MINOR DEVIATIONS AS MAY OCCUR OR BE NECESSARY IN CONSTRUCTION.
MINOR DETAILS NOT SHOWN.

REV	DATE	BY	CH
V	10MAY13	JAF	CAG
V	05MAR13	JAF	CAG

CHASSIS DATA
MAKE: PETERBILT
MODEL: 348

Pierce MANUFACTURING INC.
BRADENTON, FLORIDA

TITLE: 1000-D-3000 POLY,182"DRYSIDE BODY
34"SIDE CONTROL,(2)CROSSLAYS
FOR: MANHEIM TOWNSHIP FIRE RESCUE
LANCASTER,PENNSYLVANIA
DWG NO. 26211AD

JOB NO.	26211
SCALE 1:24	DATE
DRAWN BY JAF	18DEC12
CHECKED BY AIV	18DEC12
SHEET SIZE D	SHEET NO. 1 OF 1

View File Created 14-MAY-2013 07:13:48