PASSENGER'S SIDE COMPARTMENTS CONTAIN THE FOLLOWING:

COMPARTMENT P1 CONTAINS:
- (1) 22"DP ADJ SHELF
- (1) 22"DP FLOOR MOUNTED TRAY
- (2) ELECTRIC CORD REELS WITH 200' OF 10/3 BLACK CORD
- SLIDE OUT ROLLER GUIDE ASSEMBLY
-
-
-

COMPARTMENT P2 CONTAINS:
- (1) 22"DP ADJ SLIDE OUT/TILT TRAY
- (1) 20A,120V DUPLEX RECEPTACLE
-
-
-

COMPARTMENT P3 CONTAINS:
- (1) 42"DP ADJ SLIDE OUT/TILT TRAY
- (1) 42"DP FLOOR MOUNTED SLIDE OUT TRAY
- (1) HORIZONTAL FLOOR EXTENSION
- (1) RACK FOR 10 SCBA BOTTLES
-
-

COMPARTMENT P4 CONTAINS:
- (1) 42"DP FLOOR MOUNTED SLIDE OUT TRAY
- (1) 22"DP FLOOR MOUNTED TRAY
- MOUNTING PROVISIONS FOR 2 CUSTOMER INSTALLED HYDRAULIC REELS
- SLIDE OUT ROLLER GUIDE ASSEMBLY
- (1) 30A,240V T.L. RECEPTACLE
- (1) HORIZONTAL FLOOR EXTENSION
-
-

COMPARTMENT P5 CONTAINS:
- (1) 42"DP SLIDE OUT TOOLBOARD
- (1) 22"DP FLOOR MOUNTED TRAY
- (1) HORIZONTAL FLOOR EXTENSION
-
-

COMPARTMENT P6 CONTAINS:
-
-

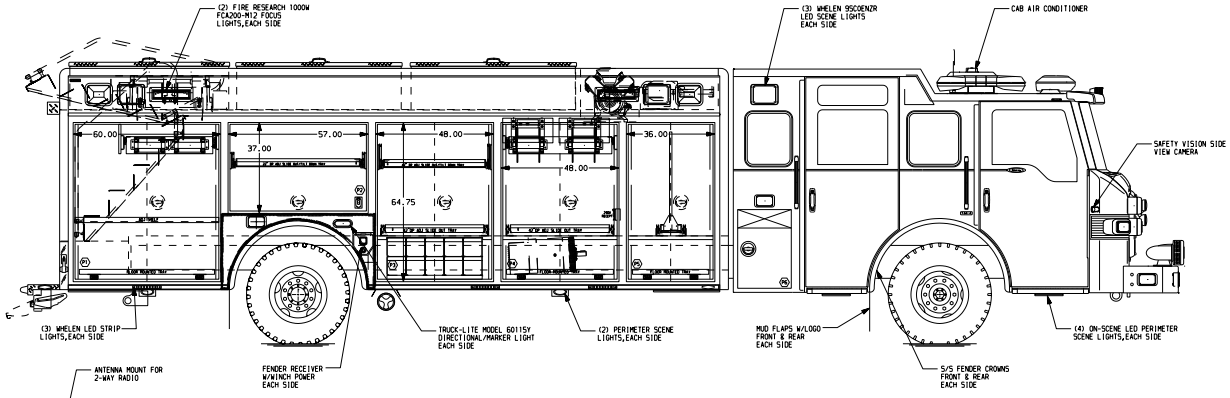

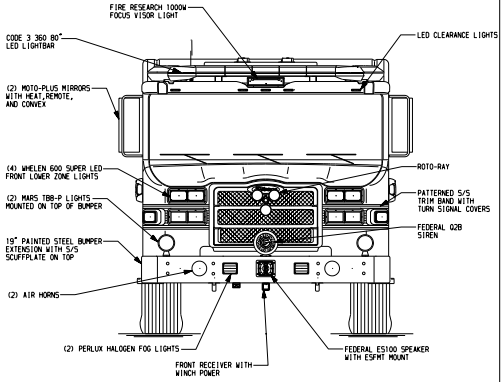

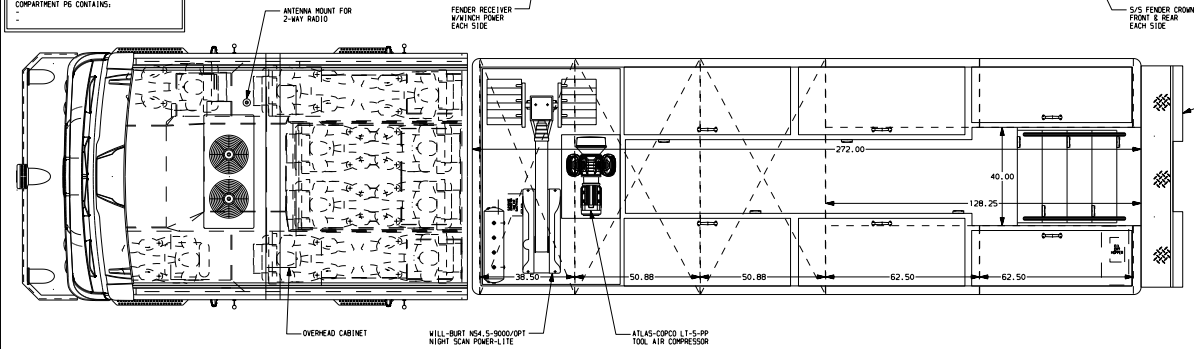

REAR COMPARTMENT CONTAINS THE FOLLOWING:

COMPARTMENT R1 CONTAINS:
-
-
-
-
-

COMPARTMENT R1 CONTAINS:
-
-
-
-
-

DRIVER'S SIDE COMPARTMENTS CONTAIN THE FOLLOWING:

COMPARTMENT D1 CONTAINS:
- (1) OIL DRY HOPPER WITH AIR ACTUATED VALVE
- (1) 22"DP FLOOR MOUNTED TRAY
- (2) ELECTRIC CORD REELS WITH 200' OF 10/3 BLACK CORD
- SLIDE OUT ROLLER GUIDE ASSEMBLY
-

COMPARTMENT D2 CONTAINS:
- (1) VERTICAL COMPARTMENT DIVIDER
- (1) 22"DP ADJ SHELF
- (1) 12V,2.5 CU.FT. REFRIGERATOR
-

COMPARTMENT D3 CONTAINS:
- (1) 42"DP ADJ SLIDE OUT/TILT TRAY
- (1) 42"DP FLOOR MOUNTED SLIDE OUT TRAY
- (1) HORIZONTAL FLOOR EXTENSION
-
-

COMPARTMENT D4 CONTAINS:
- (1) 42"DP FLOOR MOUNTED SLIDE OUT TRAY
- (1) 22"DP FLOOR MOUNTED TRAY
- MOUNTING PROVISIONS FOR 2 CUSTOMER INSTALLED HYDRAULIC REELS
- SLIDE OUT ROLLER GUIDE ASSEMBLY
- (1) 30A,240V T.L. RECEPTACLE
- (1) HORIZONTAL FLOOR EXTENSION
-
-

COMPARTMENT D5 CONTAINS:
- (1) TOOL AIR REEL WITH 150' OF HOSE
- SLIDE OUT ROLLER GUIDE ASSEMBLY
- (1) CIRCUIT BREAKER PANEL
- (1) GENERATOR METER PANEL
- (1) SUB FEED BOX
- (1) NIGHT SCAN CONTROLLER
- (1) HORIZONTAL FLOOR EXTENSION
-

COMPARTMENT D6 CONTAINS:
-
-

NOTE:
LAP DOORS HAVE BEEN SHOWN IN HIDDEN LINES TO CLEARLY IDENTIFY THE EQUIPMENT IN EACH COMPARTMENT

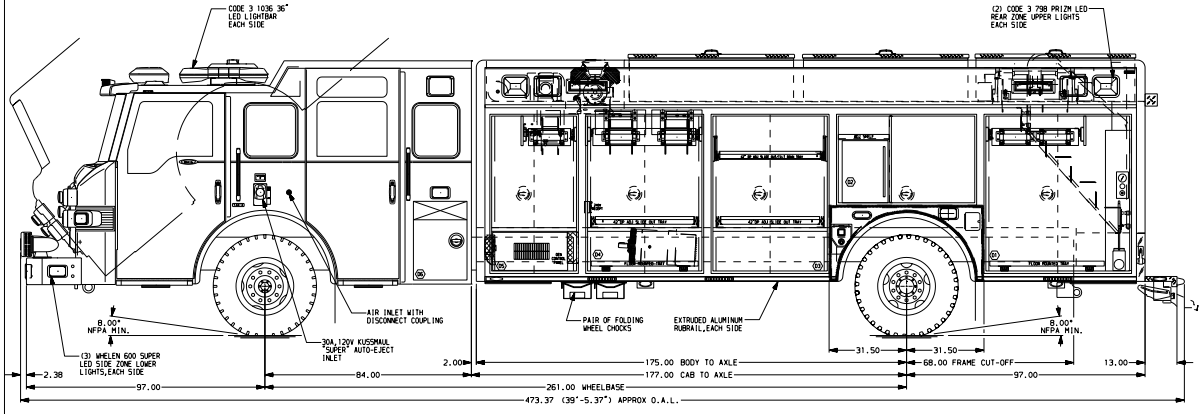

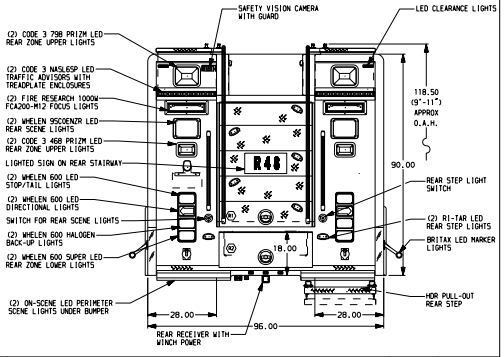

NOTE
DIMENSIONS SHOWN ARE APPROXIMATE AND ARE SUBJECT TO MINOR DEVIATIONS AS MAY OCCUR OR BE NECESSARY IN CONSTRUCTION.
MINOR DETAILS NOT SHOWN.

NOTES:
1. KUSSMAUL PUMP PLUS 1200 CHARGER LOCATED BEHIND DRIVER'S SEAT
2. ONSPOT AUTOMATIC TIRE CHAINS LOCATED UNDER BODY
3. FLOOR IN CAB AND CREW CAB TO BE PADDED RUBBER
4. POLISHED S/S SCUFFPLATE ON REAR OF ENGINE TUNNEL
5. WARN 9,000# PORTABLE WINCH
6. ONAN 25kW SINGLE PHASE PTO DRIVEN GENERATOR WITH SPLASH GUARD LOCATED BETWEEN THE FRAME RAILS
7. S/S REAR BODY CORNERS 20" HIGH
8. (3) 9,000# RECEIVER STYLE TIE DOWNS
9. PULL STRAPS FOR COMPARTMENTS D2 AND P2
10. S/S SCUFFPLATES ON INSIDE OF COMPARTMENT DOORS AND DOOR FRAME BOTTOMS
11. AMDOR LED STRIP LIGHTS LOCATED IN EACH BODY COMPARTMENT
12. AMDOR LUMABAR LIGHTS IN ADDITION TO STANDARD HATCH COMPARTMENT LIGHTS

FRONTAL IMPACT PROTECTION
SIDE ROLL PROTECTION
MAXIMUM O.A.L. 39'-5.37" | MAXIMUM O.A.H. 10'-2"

REV	DATE	BY	CH
V	08APR11	DHE	AZU
V	09MAR11	DHE	CDK

CUSTOMER APPROVAL
APPROVED BY: _____
DATE: _____

CHASSIS DATA
MAKE PIERCE
MODEL VX8410

Pierce MANUFACTURING INC.

TITLE HEAVY DUTY RESCUE NON-WALKIN
FOR HERSHEY FIRE DEPARTMENT HERSHEY, PA
DWG NO. 24005AD

JOB NO.	24005
SCALE 1:24	DATE
DRAWN BY DHE	12NOV10
CHECKED BY AZU	16NOV10
SHEET SIZE D	SHEET NO. 1 OF 1

View File Created 11-APR-2011 08:04:56