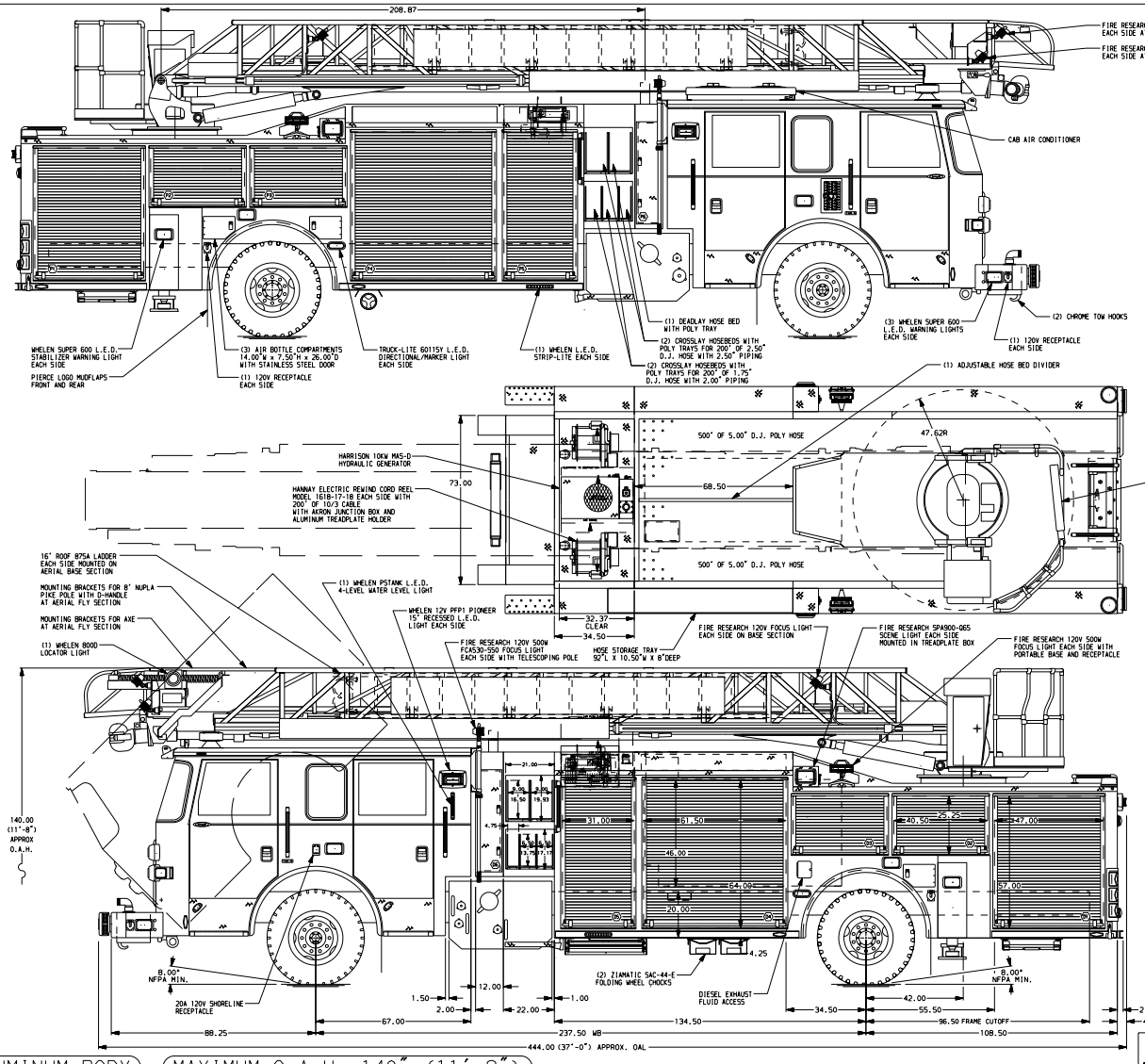

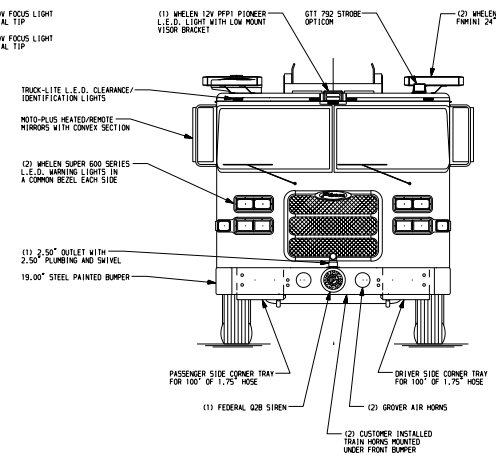

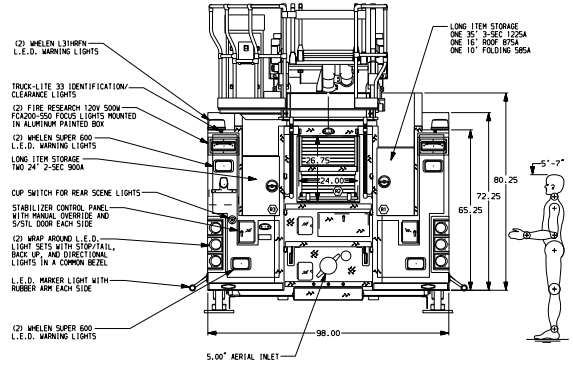

ALUMINUM BODY

MAXIMUM O.A.H.-140" (11'-8")

CUSTOMER APPROVAL

APPROVED BY: _____

DATE: _____

Pierce MANUFACTURING INC.

REV	DATE	BY	CH
14MAY12	TKA	JEC	
18APR12	TKA	DTS	
04APR12	TKA	GRM	

CHASSIS DATA — MAKE: PIERCE — MODEL: AXT6700

TITLE: 75' HAL QUINT AERIAL LADDER AND BODY ASSEMBLY, 500 GALLON WATER TANK

FOR: PARKESBURG FIRE COMPANY, PARKESBURG, PA

DWG NO. 25752AD

JOB NO.	25752
SCALE	1:24
DATE	
DRAWN BY	TKA 22MAR12
CHECKED BY	JBL 26MAR12
SHEET SIZE	D
SHEET NO.	1 OF 1

NOTE

DIMENSIONS SHOWN ARE APPROXIMATE AND ARE SUBJECT TO MINOR DEVIATIONS AS MAY OCCUR OR BE NECESSARY IN CONSTRUCTION.
MINOR DETAILS NOT SHOWN.

1. MOUNTING BASE FOR ANTENNA LOCATED PER SHOP ORDER
2. BATTERY CHARGER LOCATED IN COMPARTMENT D4
3. BATTERY CHARGE INDICATOR LOCATED ON D.S. SEAT RISER WITH BRACKET
4. PERIMETER SCENE LIGHTS LOCATED PER SHOP ORDER
5. PIERCE L.E.D. COMPARTMENT DUAL LIGHT STRIPS IN COMPARTMENT D1,D2,D3,D4,D5,P1,P2,P3,P4,P5,R2
6. AIR INLET WITH DISCONNECT COUPLING LOCATED ON THE DRIVER SIDE PUMP PANEL
7. PAC TRAC ON THE REAR WALL OF COMPARTMENT D4
8. CIRCUIT BREAKER PANEL IN COMPARTMENT D4
9. 9.00" PIERCE L.E.D. LIGHT STRIP ACROSS THE TOP OF COMPARTMENT R1, R3
10. STAINLESS STEEL FENDER CROWNS ON CAB AND BODY
11. TRIDENT FOLDING STEPS MOUNTED ON THE AERIAL DEVICE PER SHOP ORDER
12. REMOTE LADDER CONTROLS AT AERIAL TIP
13. L.E.D. ROPE LIGHTING ON AERIAL DEVICE
14. 120V POWER TO AERIAL TIP
15. 2-WAY INTERCOM SYSTEM BETWEEN AERIAL TIP AND TURNTABLE
16. AERIAL PEDESTAL RAISED 1.50"
17. 14.00" LIMITED RETRACTION
18. 1500 GPM HIGH FLOW WATERWAY
19. ON-SPOT AUTOMATIC TIRE CHAINS AT REAR AXLE

View File Created 14-MAY-2012 14:02:37