PASSENGER'S SIDE COMPARTMENTS CONTAIN THE FOLLOWING:

COMPARTMENT P1 CONTAINS:
- (1) 22"DP ADJ SLIDE OUT TOOLBOARD
- (2) ASME 6000 AIR STORAGE BOTTLES
-
-

COMPARTMENT P2 CONTAINS:
- (1) 22"DP ADJ SLIDE OUT/TILT TRAY
-
-
-

COMPARTMENT P3 CONTAINS:
- (2) 22"DP ADJ SHELVES
- (1) 23"DP FLOOR MOUNTED TRAY
-
-
-

COMPARTMENT P4 CONTAINS:
- (1) 22"DP ADJ SHELF
- (1) 23"DP FLOOR MOUNTED TRAY
- (1) ELECTRIC CORD REEL W/200' OF 10/4 YELLOW CORD
- (1) ELECTRIC CORD REEL W/200' OF 10/3 BLACK CORD
- (2) AKRON JUNCTION BOXES
-

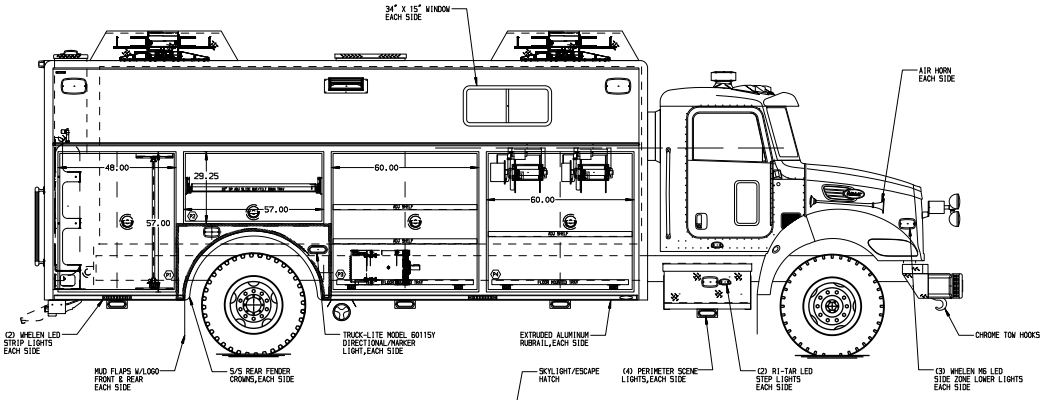


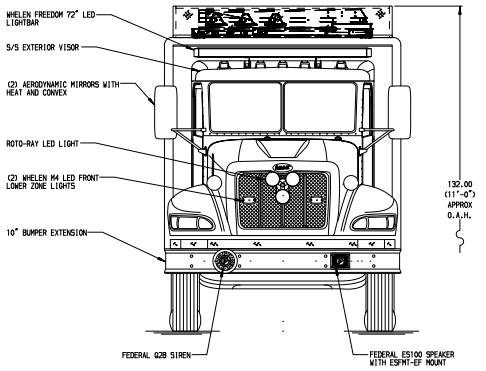


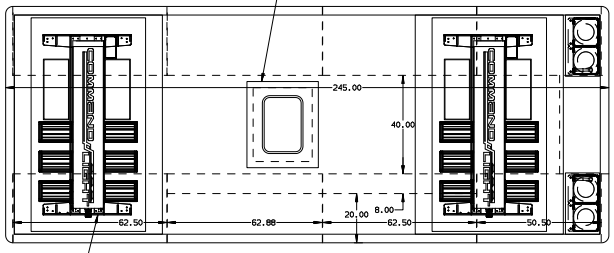


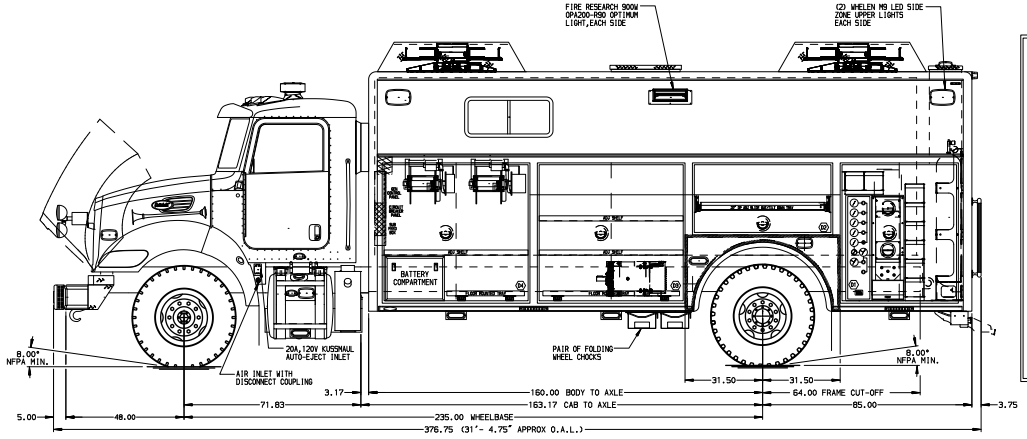


DRIVER'S SIDE COMPARTMENTS CONTAIN THE FOLLOWING:

COMPARTMENT D1 CONTAINS:
- RACKS TO HOLD 8 SCBA BOTTLES
- (2) ASME 6000 AIR STORAGE BOTTLES
- (1) CASCADE SYSTEM CONTROL PANEL
- (1) "SPACESAVER" 2-BOTTLE FILL ENCLOSURE
-
-
-
-

COMPARTMENT D2 CONTAINS:
- (1) 22"DP ADJ SLIDE OUT/TILT TRAY
-
-
-

COMPARTMENT D3 CONTAINS:
- (2) 22"DP ADJ SHELVES
- (1) 23"DP FLOOR MOUNTED TRAY
-
-

COMPARTMENT D4 CONTAINS:
- (1) COMPARTMENT FOR CHASSIS BATTERIES
- (1) KUSSMAUL PUMP PLUS 1200 CHARGER
- (2) 22"DP ADJ SHELF
- (1) 23"DP FLOOR MOUNTED TRAY
- (1) CIRCUIT BREAKER PANEL
- (1) GENERATOR METER PANEL
- (1) SUB FEED BOX
- (2) COMMAND LIGHT CONTROLLERS
- (1) ELECTRIC CORD REEL W/200' OF 10/4 YELLOW CORD
- (1) ELECTRIC CORD REEL W/200' OF 10/3 BLACK CORD
- (2) AKRON JUNCTION BOXES
-

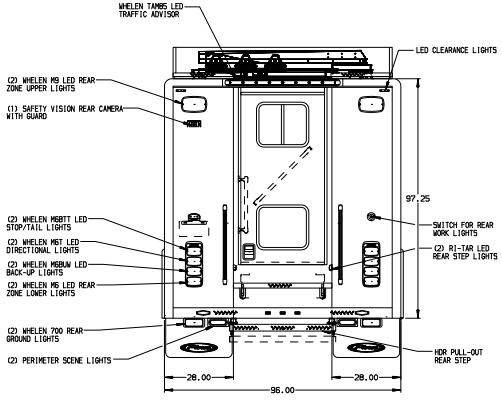


NOTE
DIMENSIONS SHOWN ARE APPROXIMATE AND ARE SUBJECT TO MINOR DEVIATIONS AS MAY OCCUR OR BE NECESSARY IN CONSTRUCTION.
MINOR DETAILS NOT SHOWN.

NOTES:
1. ONSPOT AUTOMATIC TIRE CHAINS
2. BATTERY CHARGE INDICATOR LOCATED ON DRIVER'S SEAT RISER
3. ANDOR LED LIGHT STRIPS IN EACH EXTERIOR COMPARTMENT
4. ONAN 35kW SINGLE PHASE PTO DRIVEN GENERATOR WITH XRT AND SPLASH GUARD LOCATED BETWEEN THE FRAME RAILS

CUSTOMER APPROVAL
APPROVED BY:
DATE:

| REV | DATE | BY | CH |
|---|---|---|---|
| 1 | 21FEB12 | DHE | AZU |
| 0 | 18JAN12 | DHE | PJP |

| CHASSIS DATA | |
|---|---|
| MAKE | PETERBILT |
| MODEL | 348 |

Pierce MANUFACTURING INC.

TITLE: HEAVY DUTY RESCUE WALKIN
FOR: MANHEIM TOWNSHIP FIRE RESCUE, MANHEIM TOWNSHIP, PA
DWG NO. 25235AD-SH1

| | |
|---|---|
| JOB NO. | 25235 |
| SCALE | 1:24 |
| DATE | |
| DRAWN BY | DHE 17NOV11 |
| CHECKED BY | MPE 21NOV11 |
| SHEET SIZE | D |
| SHEET NO. | 1 OF 1 |

View File Created 13-FEB-2014 14:00:54