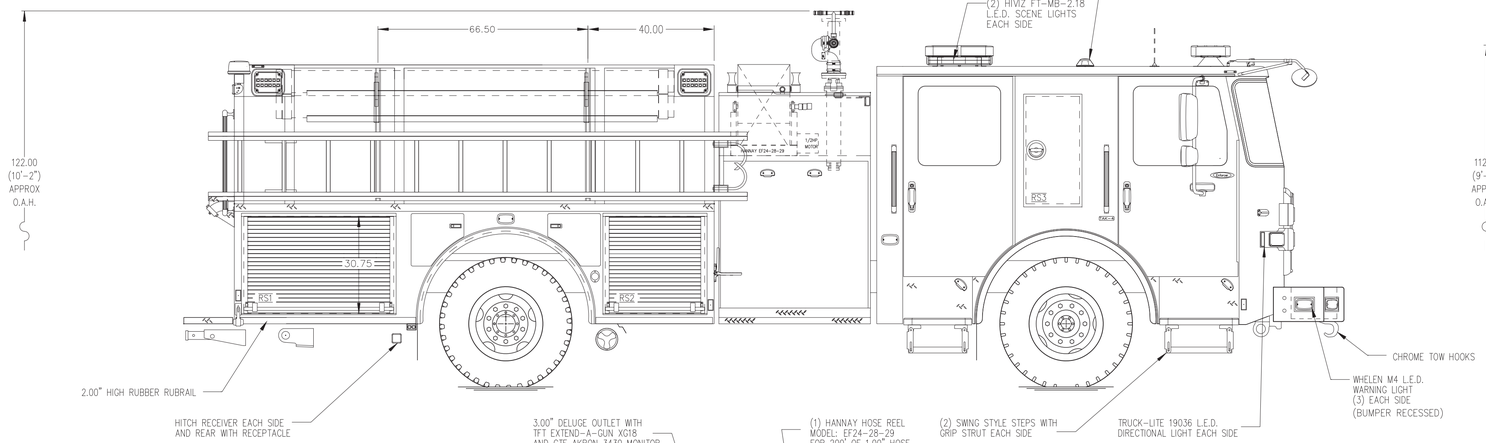

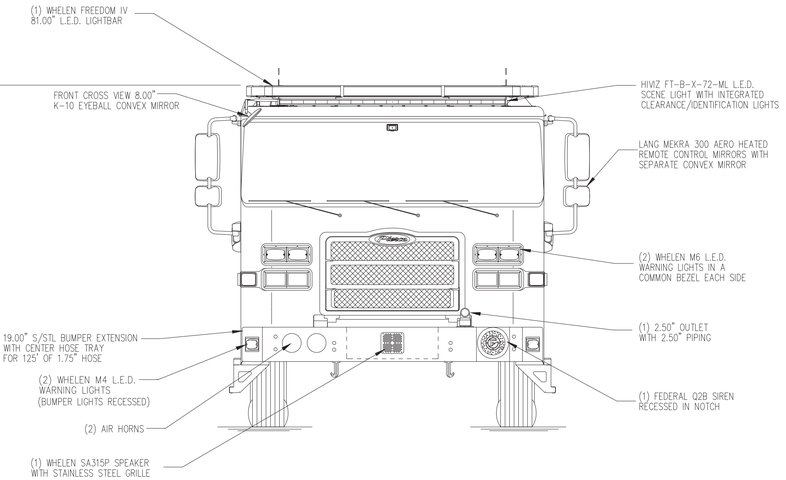

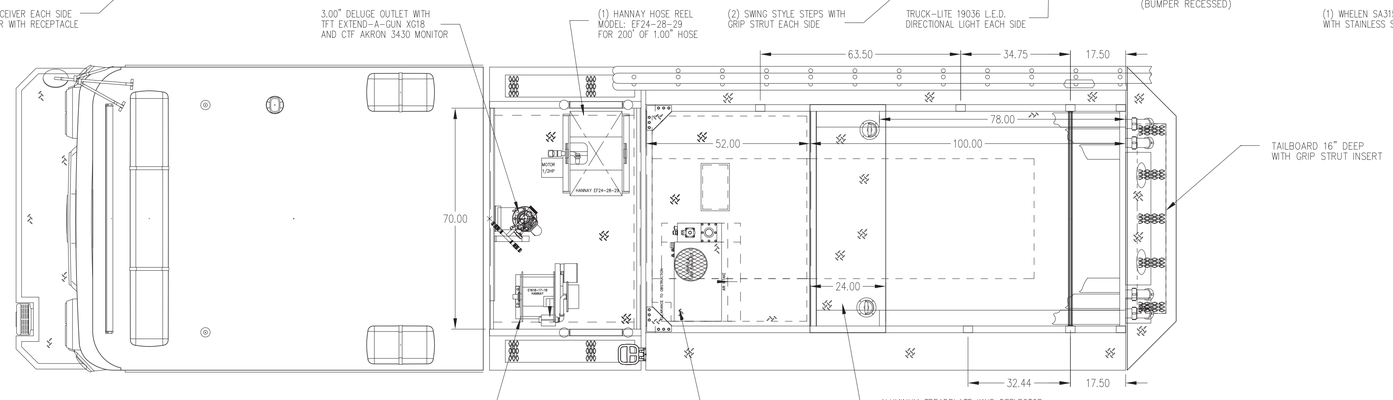

HOSEBED CAPACITIES

1. 200' OF 1.75" HOSE PRECONNECTED
2. 250' OF 2.50" HOSE PRECONNECTED
3. 500' OF 1.75" HOSE
4. 1000' OF 5.00" HOSE
5. 400' OF 3.00" HOSE
6. 250' OF 3.00" HOSE PRECONNECTED
7. 200' OF 1.75" HOSE PRECONNECTED

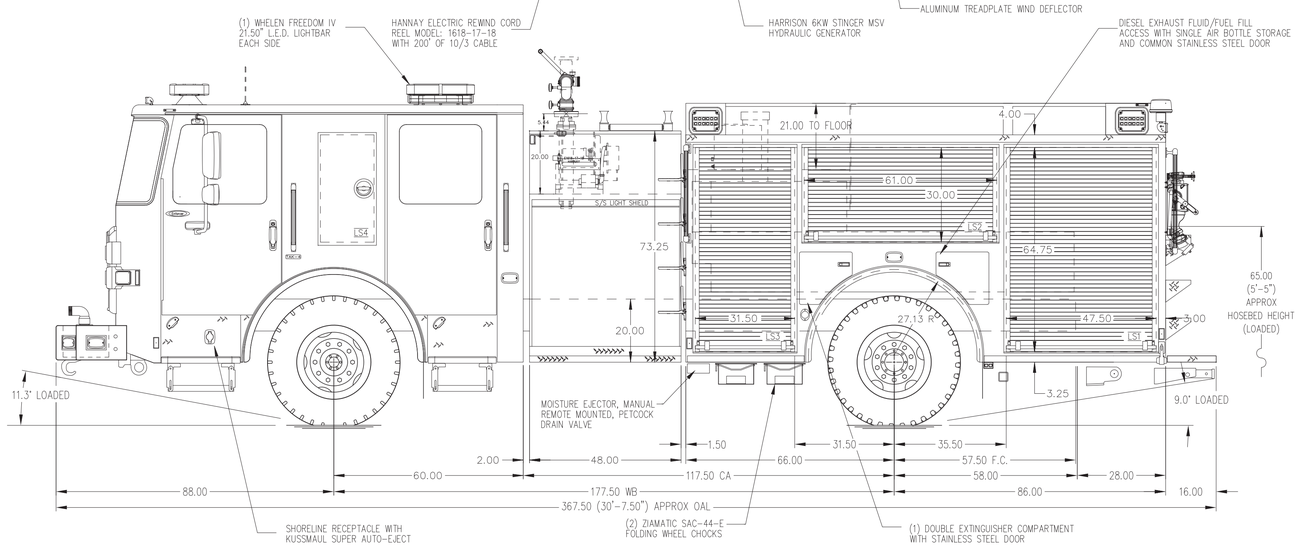

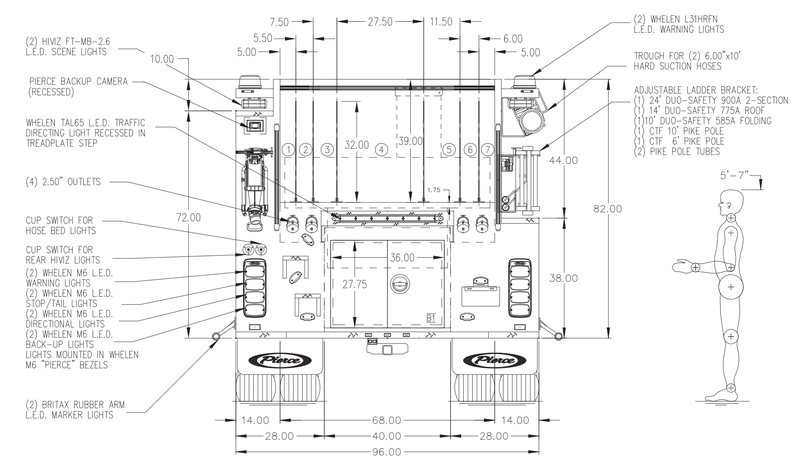

ALUMINUM BODY

MAXIMUM O.A.L. 366.00"

MAXIMUM O.A.H. 115.00"

SIDE ROLL AND FRONTAL IMPACT PROTECTION

NOTE

DIMENSIONS SHOWN ARE APPROXIMATE AND ARE SUBJECT TO MINOR DEVIATIONS AS MAY OCCUR OR BE NECESSARY IN CONSTRUCTION.
MINOR DETAILS NOT SHOWN.

1. ROSCO DV XC4 DUAL FORWARD AND INTERIOR CAMERA MOUNTED INSIDE OF FRONT WINDSHIELD
2. BATTERY CHARGER LOCATED PER SHOP ORDER
3. BATTERY CHARGER INDICATOR LOCATED PER SHOP ORDER
4. DUAL L.E.D. LIGHT STRIPS LOCATED IN HOSE BED
5. DRIP PAN GUARD FOR ROLL-UP DOOR LOCATED PER SHOP ORDER
6. CIRCUIT BREAKER PANEL LOCATED PER SHOP ORDER
7. AIR OUTLET WITH SHUT OFF VALVE LOCATED PER SHOP ORDER
8. 120V DUPLEX RECEPTACLE LOCATED PER SHOP ORDER

REV	DATE	BY	CH
V	09AUG23	KRG	–

CHASSIS DATA
MAKE: PIERCE
MODEL: ENFORCER

Pierce MANUFACTURING INC.

TITLE: 1500-D-500P, 500 GAL WATER TANK, 152" FDLER PUMPER RS LADDER BRACKETS, GENERATOR, DELUGE

FOR: CITY OF EASTON FIRE DEPARTMENT
EASTON, PENNSYLVANIA

DWG NO.: PRELIMINARY PRINT ONLY

PROPOSAL	738
SCALE	1:24
DATE	
DRAWN BY	KRG
DATE	01AUG2023
CHECKED BY	N/A
DATE	N/A
SHEET SIZE	D
SHEET NO.	1 OF 1