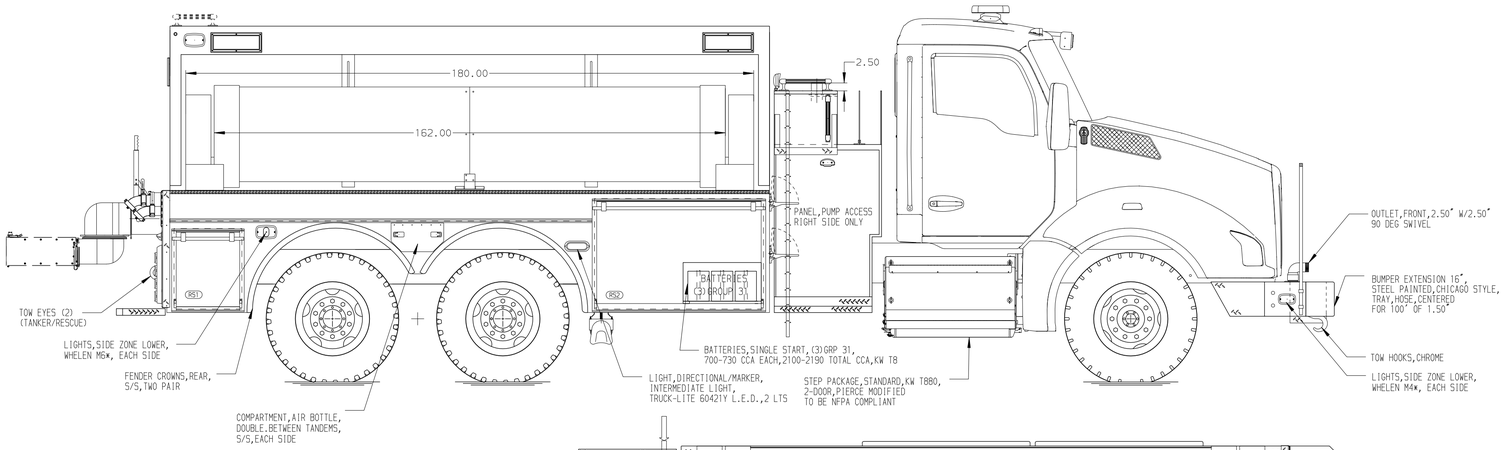


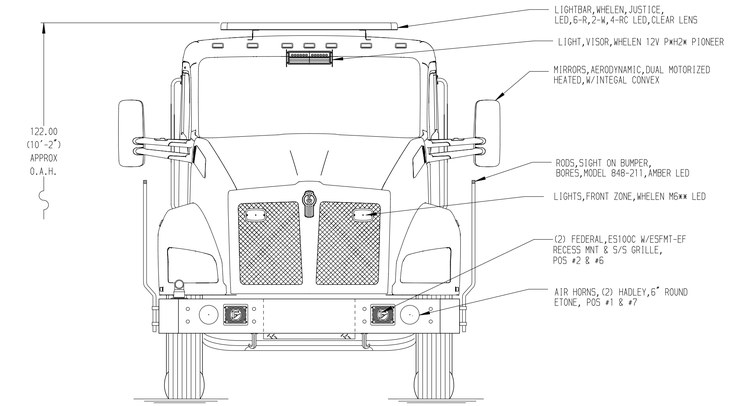


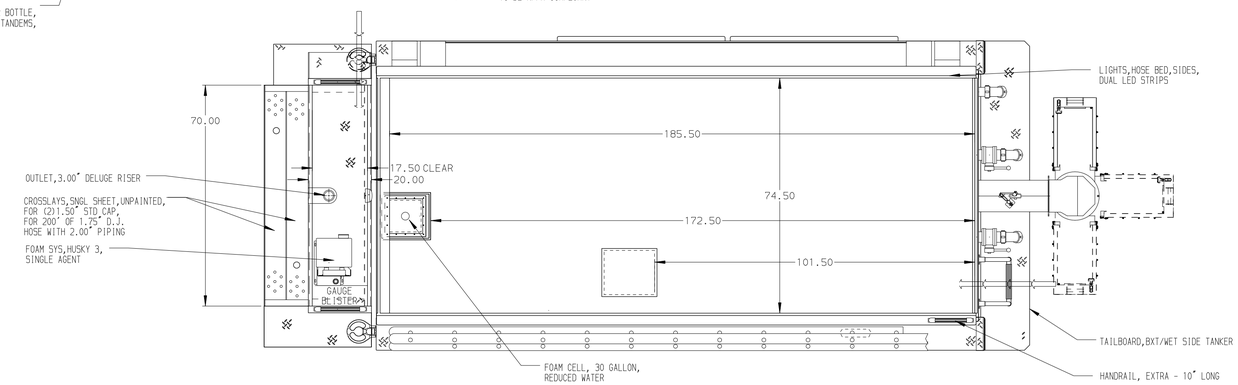


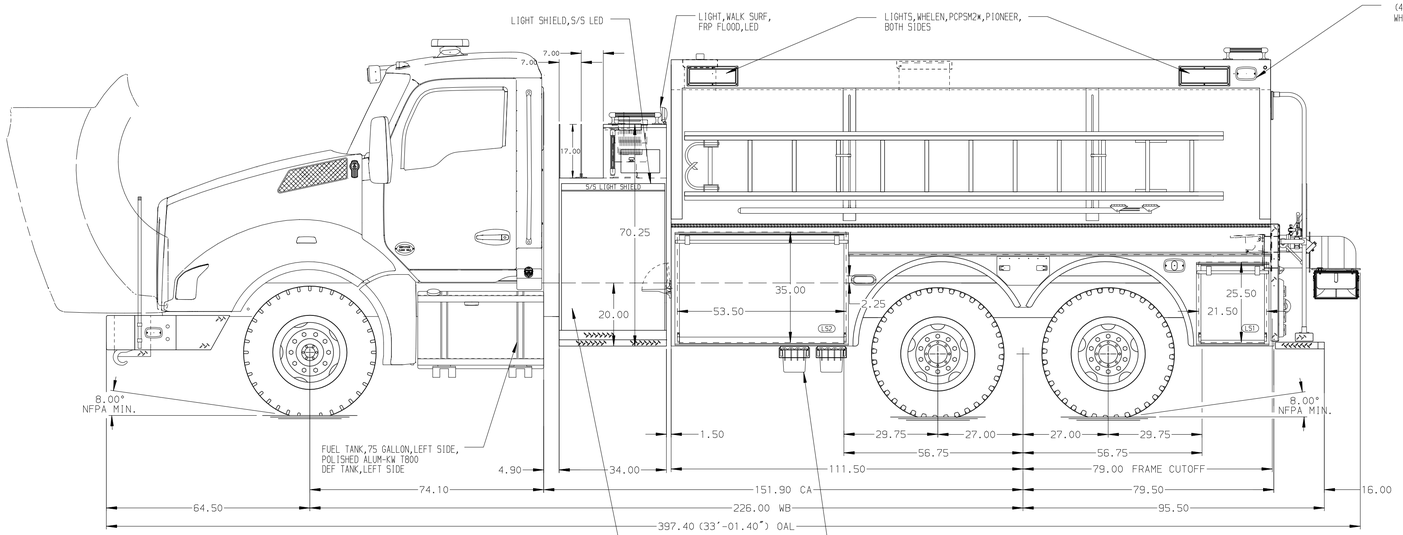


HOSEBED CAPACITIES

① 200' OF 2.50" D.J. POLY HOSE

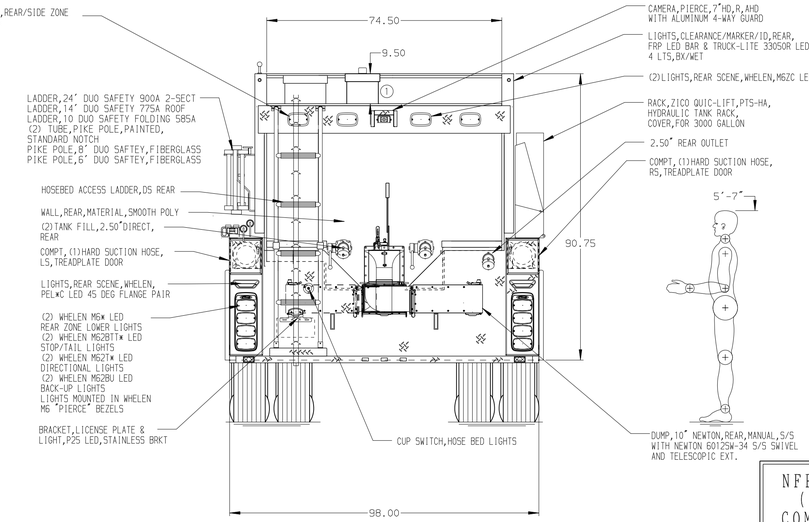





NFPA 1900
(2024)
COMPLIANT

ALUMINUM BODY

MAXIMUM O.A.H. 122.00"

NOTE

DIMENSIONS SHOWN ARE APPROXIMATE AND ARE SUBJECT TO MINOR DEVIATIONS AS MAY OCCUR OR BE NECESSARY IN CONSTRUCTION.
MINOR DETAILS NOT SHOWN.

| REV | DATE | BY | CH |
|---|---|---|---|
| 5 | 24FEB25 | ADP | CGA |
| 4 | 14NOV24 | VHO | AJA |

CHASSIS DATA
MAKE: KW
MODEL: T880 6x4

Pierce MANUFACTURING INC.
BRADENTON, FLORIDA

TITLE: 1250GPM, 3000G TANK, 2970G WATER, 30G FOAM
190" BODY TANKER WET SIDE, MUX

FOR: SOMERSET REGIONAL VFD
SOMERSET,PENNSYLVANIA

DWG NO.: 43041AD

| | |
|---|---|
| JOB NO. | 43041 |
| SCALE | 1:24 |
| DATE | |
| DRAWN BY | VHO |
| | 220CT24 |
| CHECKED BY | AJA |
| | 250CT24 |
| SHEET SIZE | D |
| SHEET NO. | 1 OF 1 |

View File Created 28-FEB-2025 06:56:59