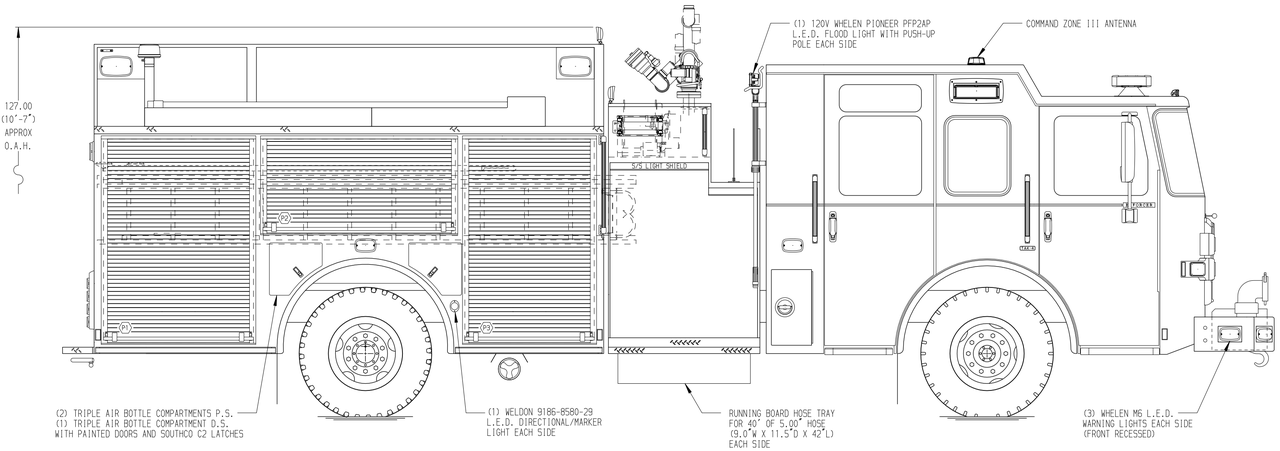

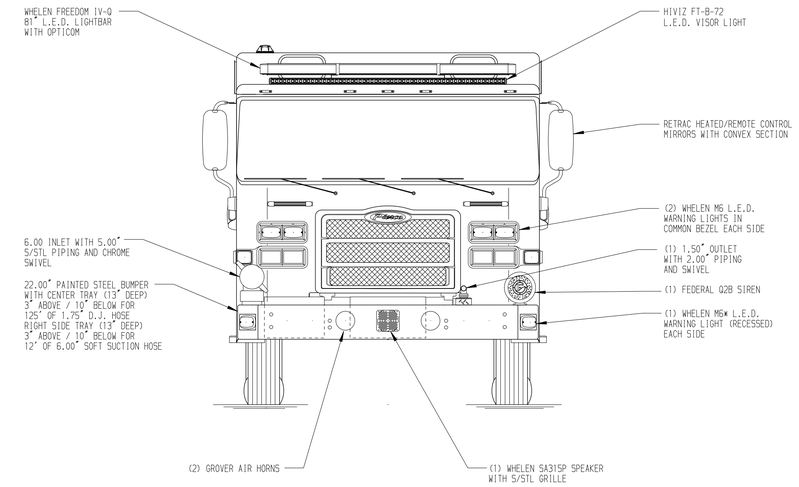

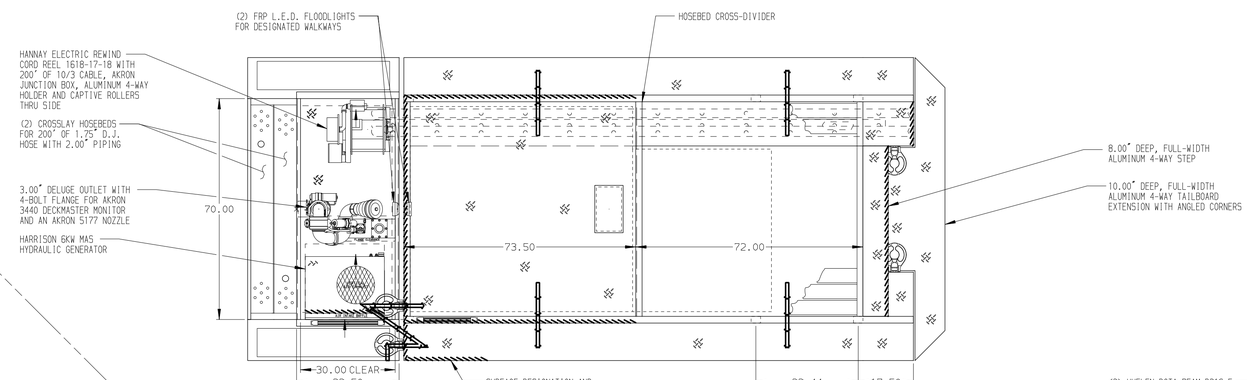

HOSEBED CAPACITIES

1. 400' OF 1.75" D.J. HOSE
2. 400' OF 2.50" D.J. HOSE
3. 1200' OF 5.00" D.J. HOSE
4. 300' OF 3.00" D.J. HOSE

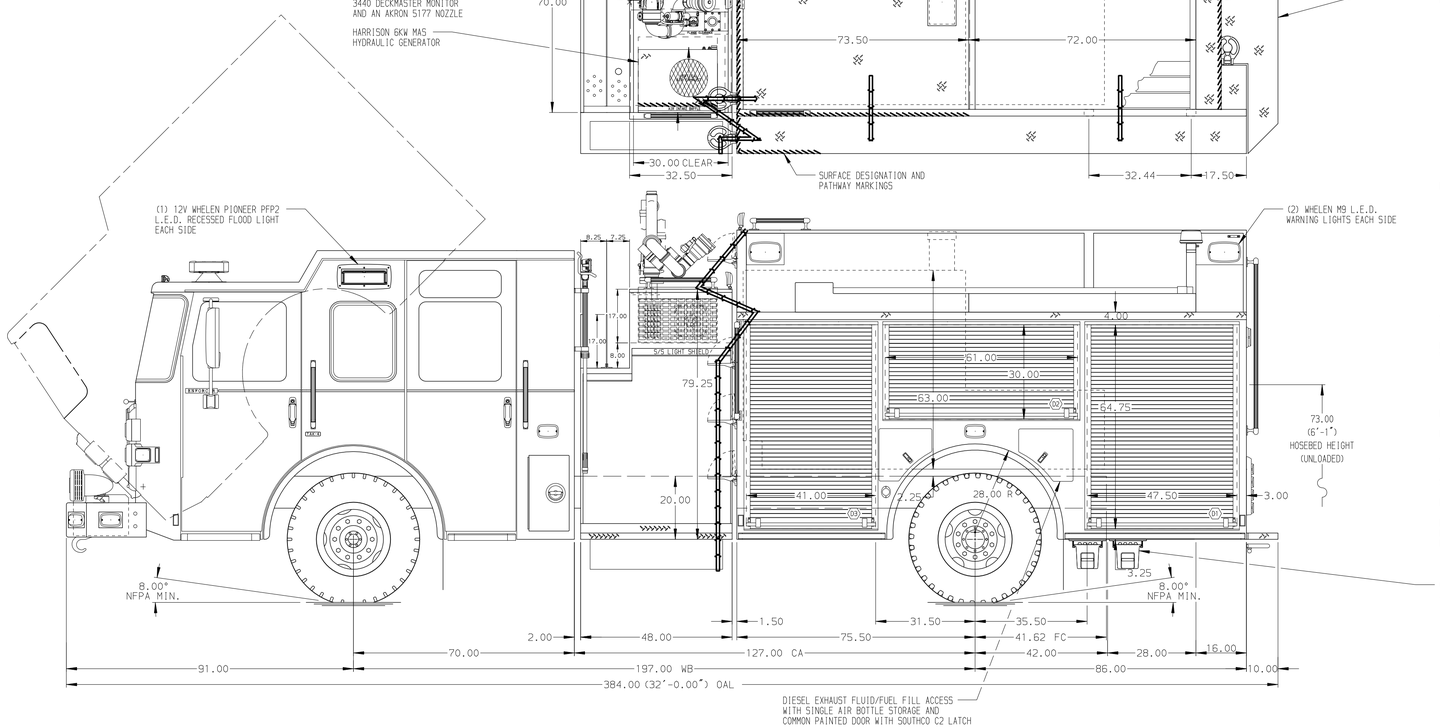

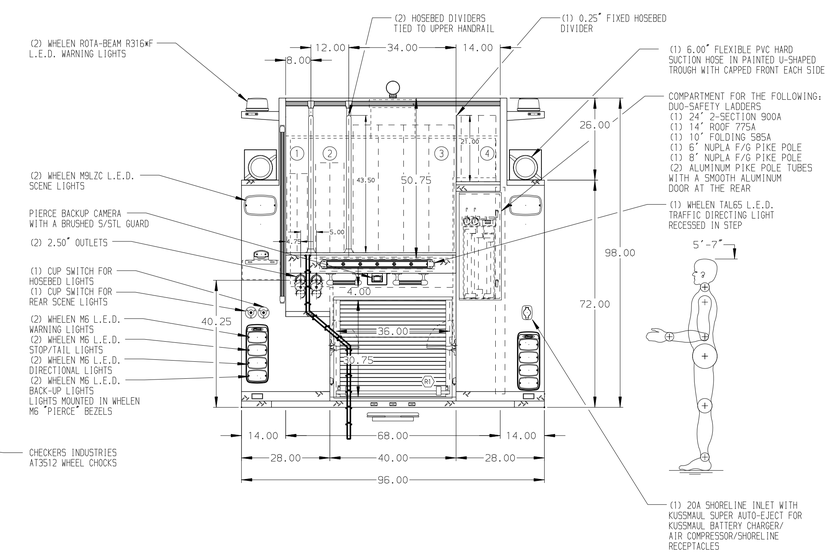

ALUMINUM BODY

SIDE ROLL AND FRONTAL IMPACT PROTECTION

NOTE

DIMENSIONS SHOWN ARE APPROXIMATE AND ARE SUBJECT TO MINOR DEVIATIONS AS MAY OCCUR OR BE NECESSARY IN CONSTRUCTION.
MINOR DETAILS NOT SHOWN.

1. KUSSMAUL PUMP PLUS 1200 BATTERY CHARGER LOCATED BEHIND DRIVER SEAT
2. BATTERY CHARGER INDICATOR LOCATED ON D.S. SEAT RISER
3. TWO PAINTED FULL WIDTH/DEPTH ADJUSTABLE SHELVES IN COMPARTMENT P1; THREE IN D1
4. ONE ADJUSTABLE SLIDE-OUT TRAY IN COMPARTMENTS D1, D3, P1 & R1
5. ONE PAINTED FLOOR MOUNTED SLIDE-OUT TRAY IN COMPARTMENTS P1, P3 & R1
6. PAC TRAC ON THE REAR WALL OF COMPARTMENTS D2, D3, P2 & P3
7. CIRCUIT BREAKER PANEL IN COMPARTMENT D3
8. ONE 15A, 120V 6-PLACE RECEPTACLE STRIP IN EACH EMS CABINET AND ONE IN CAB
9. ONE 15A, 120V DUPLEX RECEPTACLE LOCATED IN COMPARTMENT P3
10. ROLL-OUT VINYL FLAP IN COMPARTMENTS D2 & P2
11. PARTITION BETWEEN COMPARTMENTS D1/R & P1/R1

REV	DATE	BY	CH
7	17AUG16	NPA	DTS
6	15AUG16	NPA	DTS
5	22JUL16	NPA	DTS

CHASSIS DATA — MAKE: PIERCE — MODEL: ENFORCER

Pierce MANUFACTURING INC.

TITLE: 1500-D-1000 GAL POLY, 161" FH DS, FH FD PS (2) XLAYS, LADDER THRU BODY, DELUGE, GENERATOR

FOR: STROUDSBURG, BOROUGH OF - PHOENIX CO. NO. 2 STROUDSBURG, PENNSYLVANIA

DWG NO.: 30058AD

JOB NO.	SCALE	DRAWN BY	CHECKED BY	SHEET SIZE	SHEET NO.
30058	1:24	NPA	CSH	D	1 OF 1

DATE: 27APR16 / 28APR16

View File Created 17-AUG-2016 11:33:06