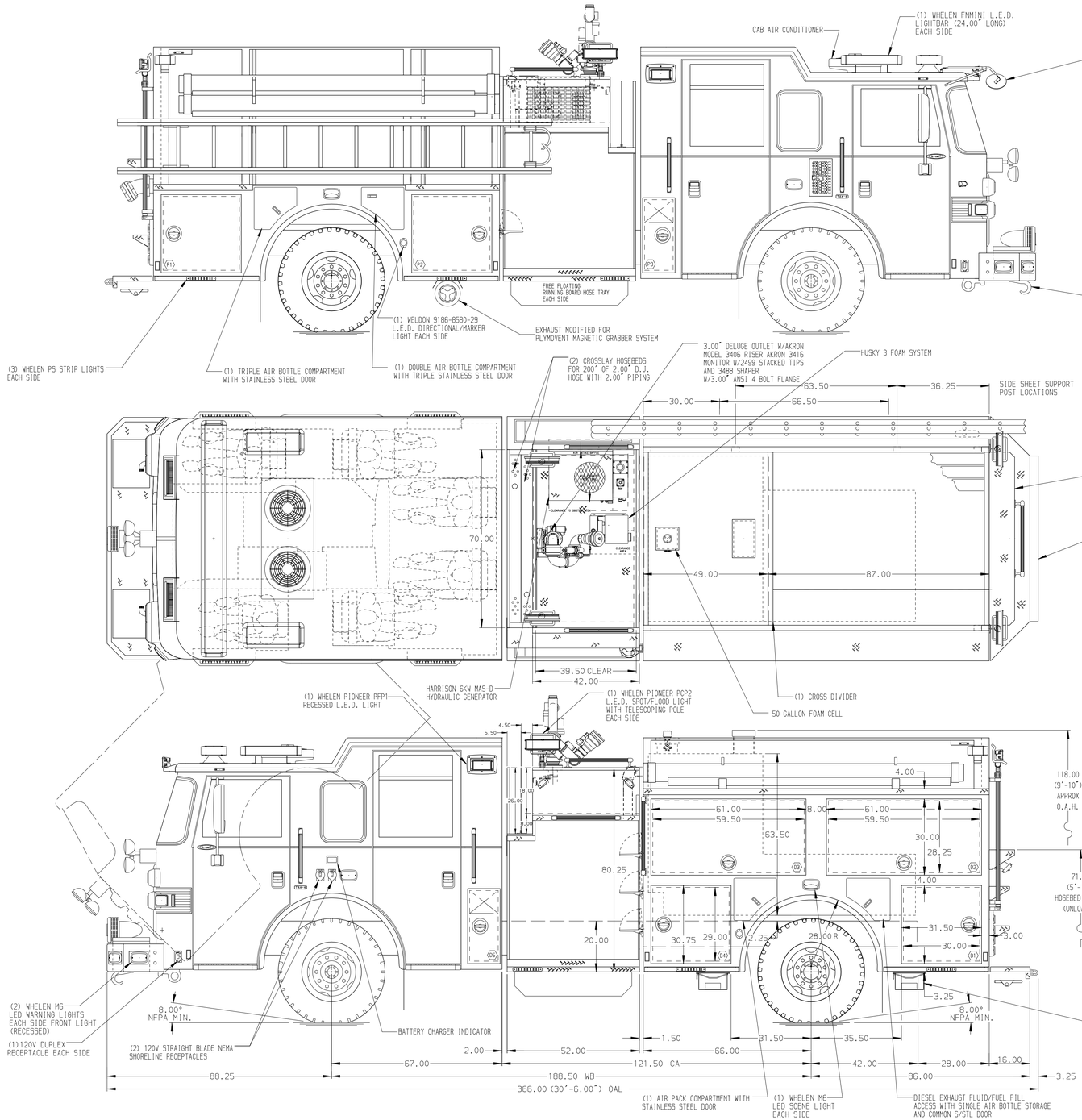

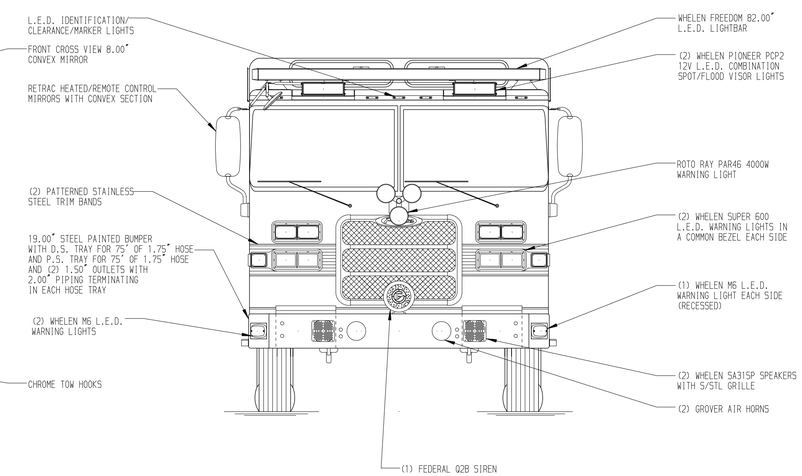

HOSEBED CAPACITIES

1. 300' OF 3.00" D.J. HOSE
2. 1500' OF 5.00" D.J. HOSE
3. 200' OF 2.50" D.J. HOSE
4. 200' OF 2.00" D.J. HOSE

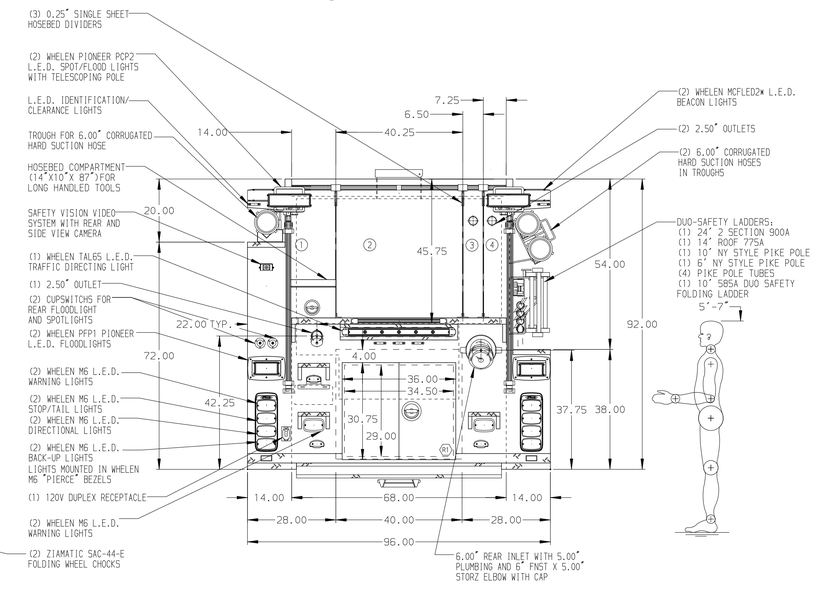

ALUMINUM BODY

SIDE ROLL AND FRONTAL IMPACT PROTECTION

NOTE

DIMENSIONS SHOWN ARE APPROXIMATE AND ARE SUBJECT TO MINOR DEVIATIONS AS MAY OCCUR OR BE NECESSARY IN CONSTRUCTION.
MINOR DETAILS NOT SHOWN.

1. ONSPOT AUTOMATIC TIRE CHAINS TO BE PROVIDED AT REAR
2. S/STL SCUFFPLATE ON EACH CAB DOOR JAMB
3. S/STL SCUFFPLATE ON REAR OUTER CORNERS OF CAB
4. MOUNTING BASE FOR ANTENNA LOCATED PER SHOP ORDER
5. BATTERY CHARGER LOCATED IN D3
6. PERIMETER SCENE LIGHTS LOCATED PER SHOP ORDER
7. STAINLESS STEEL SCUFFPLATE ON BODY,FRONT, AND REAR CORNERS
8. REVERSED HINGED DOORS ON D4 AND P2
9. S/STL SCUFFPLATE ON BOTTOM EDGE OF DOOR FRAMING OF D1,D2,D3,D4,P1,P2,R1
10. S/STL SCUFFPLATE INTERIOR OF DOOR IN D1,D2,D3,D4,P1,P2,R1
11. PIERCE L.E.D. COMPARTMENT DUAL LIGHT STRIPS LOCATED PER SHOP ORDER
12. PAINTED SHELF TRACKS LOCATED IN D1,D2,D3,D4,R1,P1,AND P2
13. PAC TRAC ON THE REAR WALL OF D2,D3
14. ALL FOLDING STEPS TO BE TRIDENT WITH INTEGRATED L.E.D. LIGHT UNLESS SPECIFIED
15. PIERCE LOGO MUDFLAPS FRONT AND REAR
16. STAINLESS STEEL FENDER CROWNS ON CAB AND REAR BODY
17. CIRCUIT BREAKER PANEL IN D3
18. AIR INLET WITH DISCONNECT COUPLING ON THE D.S. PUMP PANEL
19. MOUNTING PROVISION FOR (CTF) HANNAY MODEL #TEF2500 COMBINATION REEL FOR 200' OF 10/3 CABLE AND 100' OF 1" FORESTRY HOSE IN R1
20. FOUR 120V DUPLEX RECEPTACLES (2) OVER EACH EMS CABINET ON THE REAR WALL OF THE CREW CAB
21. TWO 120V DUPLEX RECEPTACLES (1) EACH SIDE OF ENGINE TUNNEL

REV	DATE	BY	CH
V	270CT15	LST	JJR
V	21SEP15	LST	JJR
V	17SEP15	LST	JRE

CHASSIS DATA	
MAKE	PIERCE
MODEL	ARROW-XT
DWG NO.	29245AD

Pierce MANUFACTURING INC.

TITLE	2000-D-750P W/50 GAL FOAM CELL, 136" BODY, DS HIGH PS LOW, SIDE CONTROL, (2) XLAYS, DELUGE, GENERATOR
FOR	NEWTOWN SQUARE FIRE COMPANY #1 NEWTOWN SQUARE, PENNSYLVANIA

JOB NO.	29245
SCALE	1:24
DATE	
DRAWN BY	LST
DATE	27JUL15
CHECKED BY	CSH
DATE	31JUL15
SHEET SIZE	D
SHEET NO.	1 OF 1

View File Created 27-OCT-2015 15:14:25