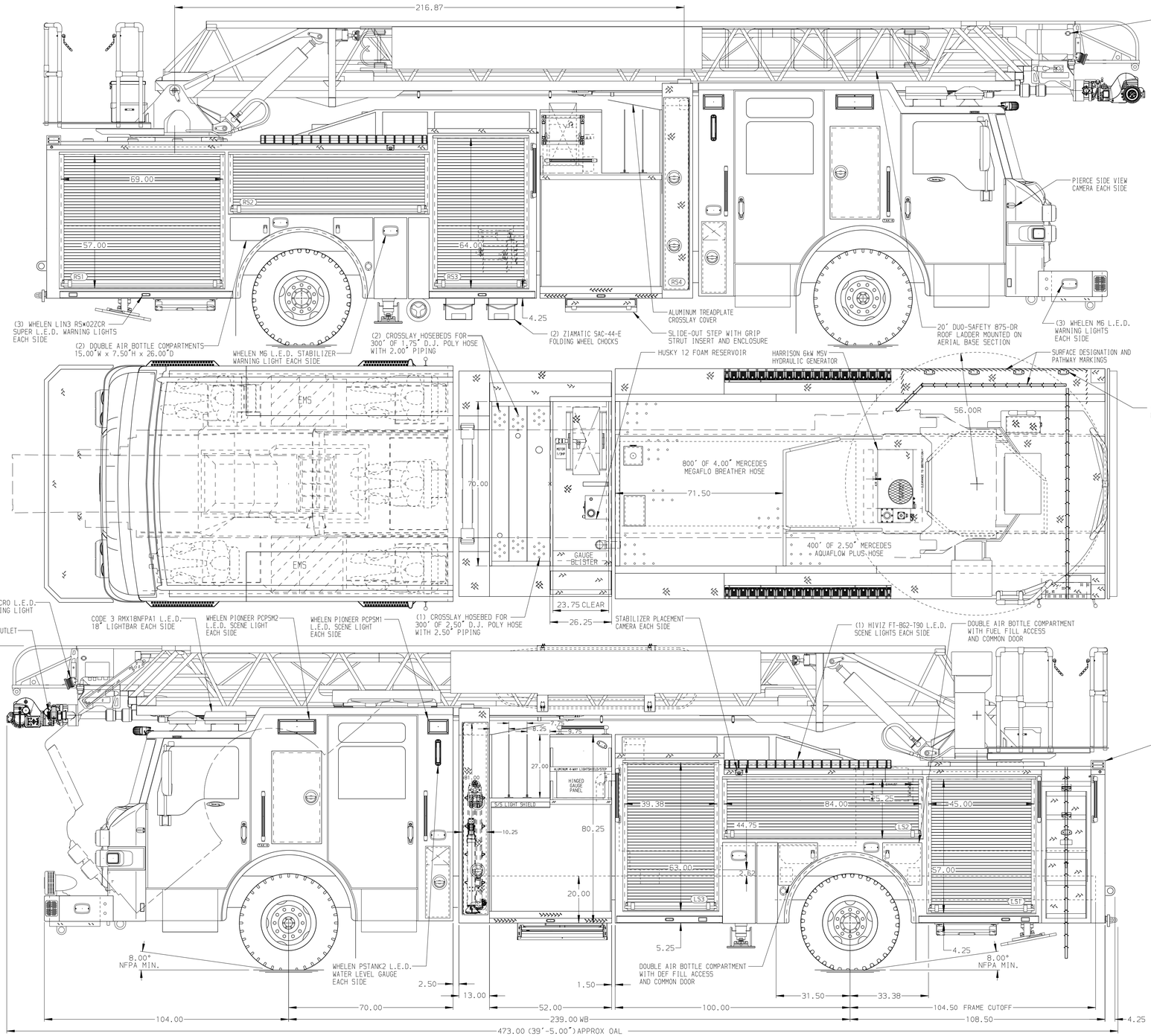


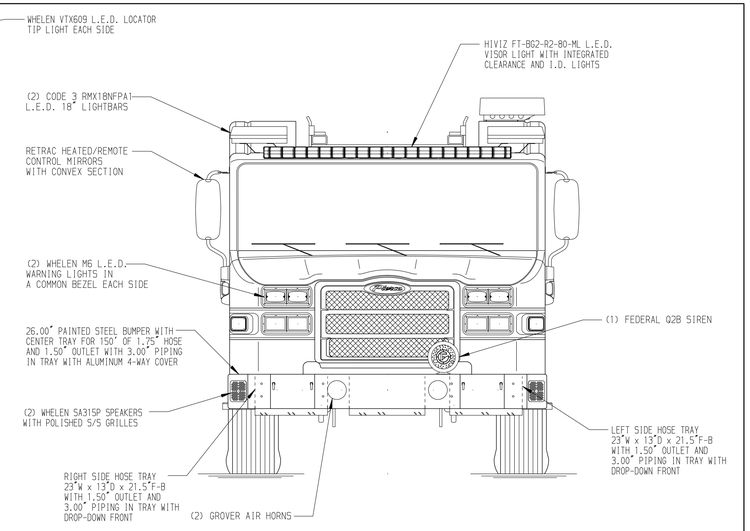


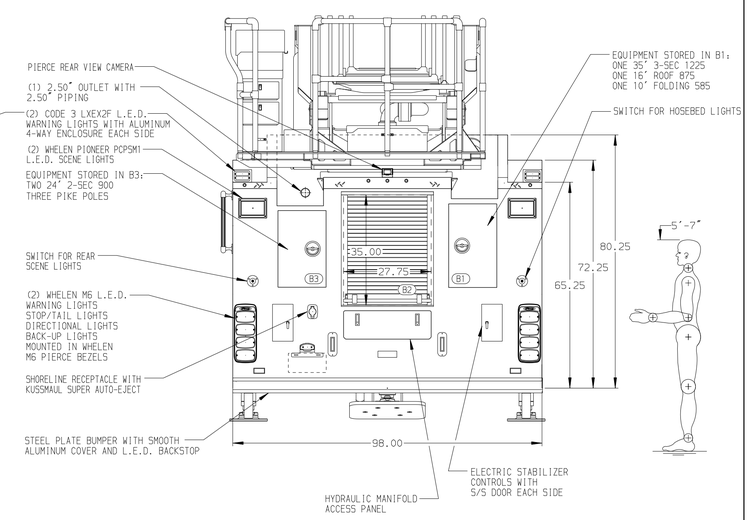


ALUMINUM BODY

NOTE

DIMENSIONS SHOWN ARE APPROXIMATE AND ARE SUBJECT TO MINOR DEVIATIONS AS MAY OCCUR OR BE NECESSARY IN CONSTRUCTION.
MINOR DETAILS NOT SHOWN.

1. DUAL L.E.D. LIGHT STRIPS LOCATED IN HOSE BED.
2. NINE ADJUSTABLE FULL WIDTH/FULL DEPTH SHELVES IN COMPARTMENT PER SHOP ORDER
3. ONE ADJUSTABLE SLIDE-OUT TRAY IN COMPARTMENT PER SHOP ORDER
4. TWO FLOOR MOUNTED SLIDE-OUT TRAYS IN COMPARTMENTS PER SHOP ORDER
5. ONE ALUMINUM SLIDE-OUT TOOLBOARD IN COMPARTMENT PER SHOP ORDER
6. ONE SWING-OUT ALUMINUM TOOL BOARD IN COMPARTMENT PER SHOP ORDER
7. THREE 120V DUPLEX RECEPTACLES IN COMPARTMENTS AND TWO LOCATED IN CAB PER SHOP ORDER
8. ONE 120V 4-PLACE DUPLEX RECEPTACLE LOCATED IN COMPARTMENTS PER SHOP ORDER
9. AIR INLET/OUTLET WITH DISCONNECT FITTING LOCATED ON THE DRIVER'S SIDE PUMP PANEL
10. BATTERY CHARGER LOCATED BEHIND OFFICER'S SEAT
11. CIRCUIT BREAKER PANEL IN COMPARTMENT PER SHOP ORDER
12. REMOTE LADDER CONTROLS AT AERIAL TIP
13. L.E.D. LIGHTING ON AERIAL LADDER SECTIONS
14. 120V POWER TO AERIAL TIP
15. LIFTING EYE ROPE RESCUE ATTACHMENT AT AERIAL TIP
16. 1500 GPM HIGH FLOW WATERWAY
17. WIRELESS MONITOR REMOTE CONTROL NEAR THE PUMP PANEL
18. HANNAY ALUMINUM BOOSTER REEL MODEL SBEF20-30-31 WITH CAPACITY FOR 200' OF 0.75" HOSE AND 1.50" PIPING LOCATED ABOVE PUMP WITH ROLLER ASSEMBLY IN SIDE SHEET
19. LITTLE GIANT OVERHAUL MODEL 17 LADDER LOCATED IN BOOM COMPARTMENT LS4
20. MICROPHONE AND SPEAKER BOX LOCATED ON THE DRIVER'S SIDE PUMP PANEL
21. LADDER BELT STORAGE BOX AT AERIAL TURNTABLE
22. NO LIMITED RETRACTION ON AERIAL DEVICE
23. MOUNTING FOR PIKE POLE AT AERIAL FLY SECTION
24. ONE FLOOR MOUNTED SLIDE-OUT FLAT TOP TRAY IN COMPARTMENT PER SHOP ORDER
25. ONE SLIDE-OUT TOOLBOARD IN COMPARTMENT PER SHOP ORDER
26. ONE HORIZONTAL PARTITION IN COMPARTMENT PER SHOP ORDER
27. FOUR VERTITICAL PARTITION IN COMPARTMENTS PER SHOP ORDER
28. GTT 794 OPTICOM AT AERIAL TIP

| REV | DATE | BY | CH |
|---|---|---|---|
| 7 | 12NOV20 | LWE | DTS |
| 6 | 09SEPT20 | LWE | DTS |
| 5 | 08SEPT20 | LWE | DTS |
| 4 | 29JULY20 | LWE | DTS |
| 3 | 20MAR20 | SHU | NDA |

CHASSIS DATA
MAKE: PIERCE
MODEL: VELOCITY

Pierce MANUFACTURING INC.

TITLE: 107' ASCENDANT AERIAL LADDER AND BODY ASSEMBLY 500 GALLON WATERTANK-480 WATER/20 FOAM
FOR: YARDLEY-MAKEFIELD FIRE CO YARDLEY, PENNSYLVANIA
DWG NO.: 34889AD

| | |
|---|---|
| JOB NO. | 34889 |
| SCALE | 1:24 |
| DATE | |
| DRAWN BY | SHU 16MAR20 |
| CHECKED BY | NDA 18MAR20 |
| SHEET SIZE | D |
| SHEET NO. | 1 OF 1 |

View File Created 13-NOV-2020 06:53:05