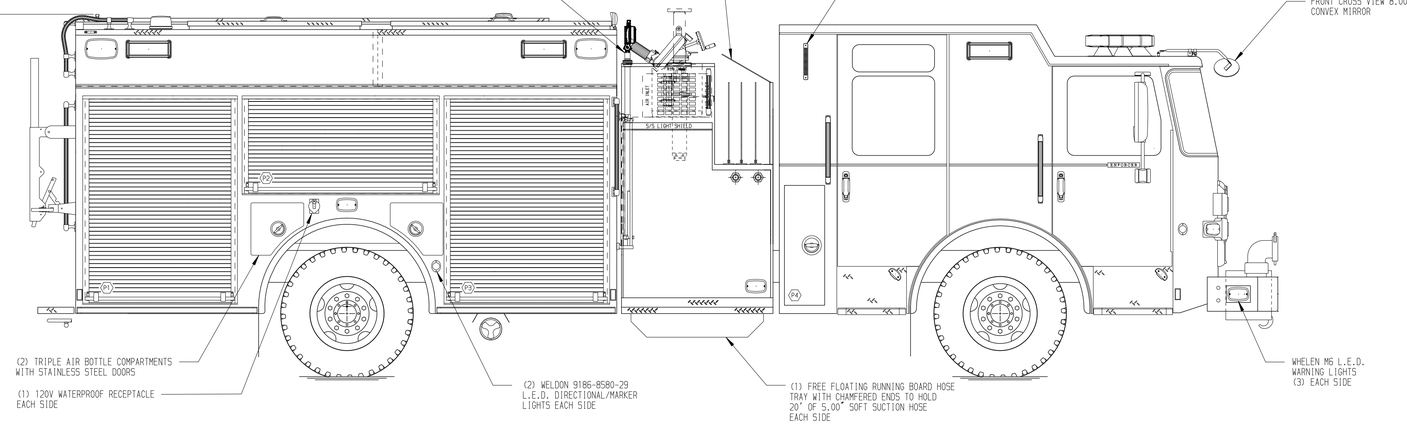

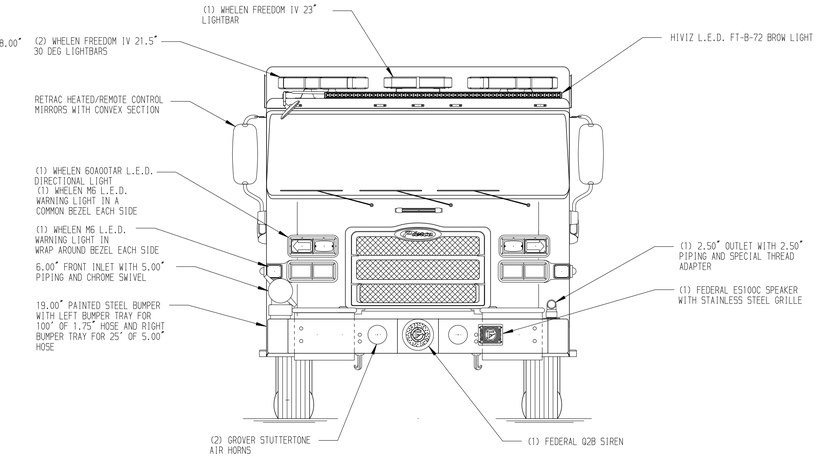

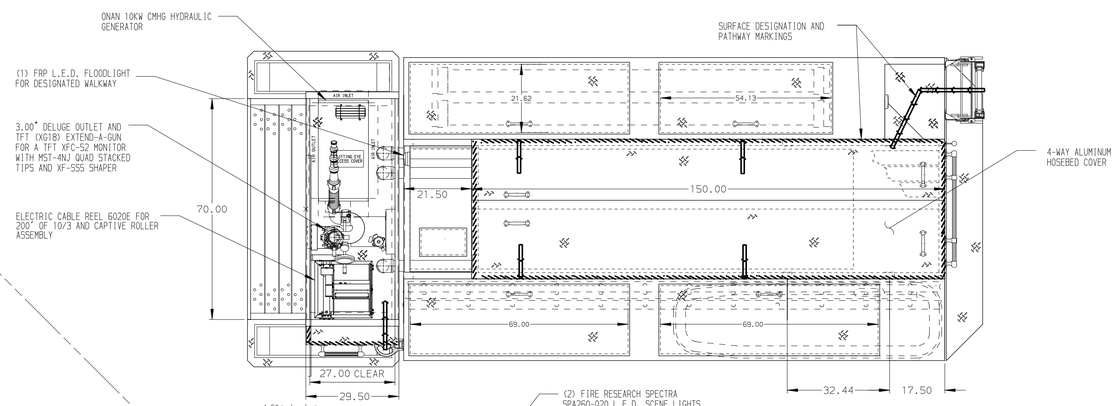

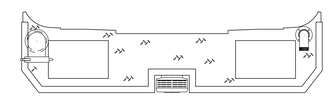

HOSEBED CAPACITIES

1. 250' OF 1.75" D.J. POLY HOSE
2. 250' OF 1.75" D.J. POLY HOSE
3. 900' OF 5.00" D.J. POLY HOSE
4. 300' OF 3.00" D.J. POLY HOSE
5. 200' OF 2.50" D.J. POLY HOSE

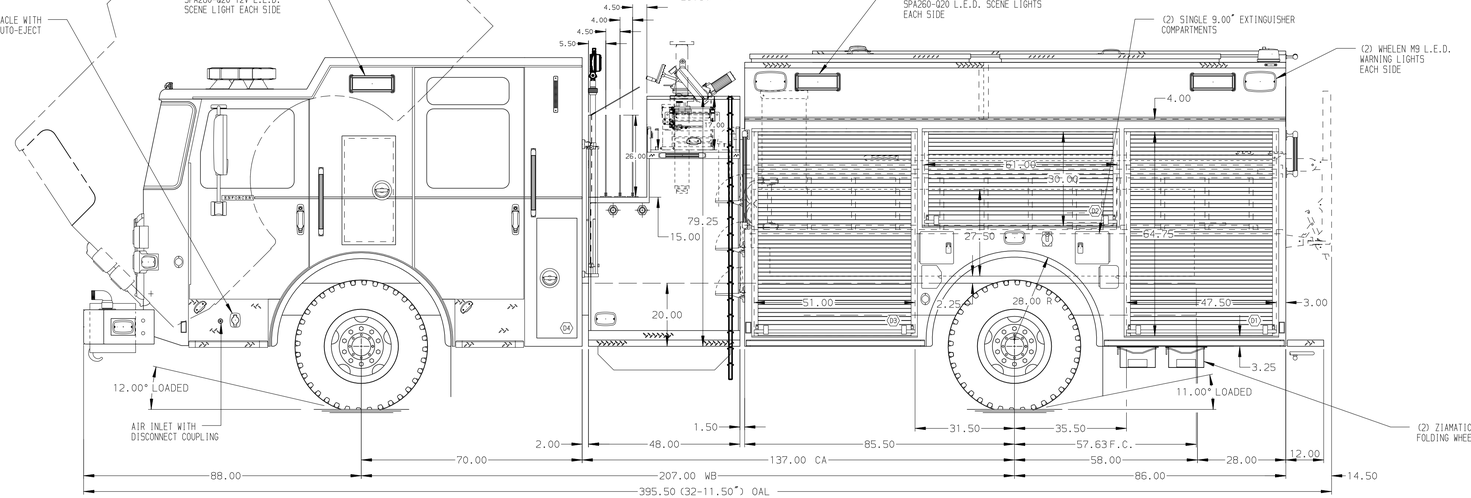

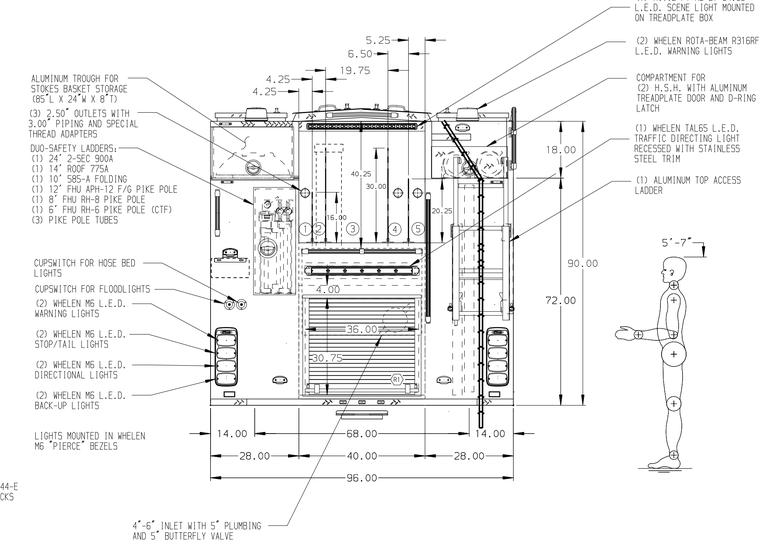

ALUMINUM BODY

MAXIMUM O.A.L. 397.00"

SIDE ROLL AND FRONTAL IMPACT PROTECTION

CUSTOMER APPROVAL

APPROVED BY: _____

DATE: _____

Pierce MANUFACTURING INC.

NOTE

DIMENSIONS SHOWN ARE APPROXIMATE AND ARE SUBJECT TO MINOR DEVIATIONS AS MAY OCCUR OR BE NECESSARY IN CONSTRUCTION.
MINOR DETAILS NOT SHOWN.

1. BATTERY CHARGER LOCATED IN COMPARTMENT D3
2. BATTERY CHARGE INDICATOR LOCATED ON DRIVER'S SEAT RISER
3. AMDOR LUMABAR L.E.D. LIGHT STRIP MOUNTED IN CARGO AREA
4. SHORELINE 120V DUPLEX RECEPTACLE LOCATED BEHIND DRIVER SEAT
5. CIRCUIT BREAKER PANEL IN COMPARTMENT D3
6. KUSSMAUL AIR COMPRESSOR LOCATED IN COMPARTMENT D3
7. ONE ADJUSTABLE FULL WIDTH/DEPTH SHELF LOCATED IN COMPARTMENTS D1, D3, P1, P3
8. ALUMINUM PEGBOARD WITH TRACK LOCATED IN COMPARTMENTS D2, D3
9. CUPSWITCH FOR FLOODLIGHTS LOCATED ON BACK OF CAB

REV	DATE	BY	CH
▽	-	-	-

CHASSIS DATA	
MAKE	PIERCE
MODEL	ENFORCER
TITLE	1750-D-500 GAL POLY, 171" FULL HEIGHT FULL DEPTH (4)X-LAYS, LADDERS THRU BODY, DELUGE, GENERATOR
FOR	LANCASTER CITY BUREAU OF FIRE LANCASTER, PA
DWG NO.	30460AD

JOB NO.	30460
SCALE	1:24
DATE	
DRAWN BY	MWA
	12AUG16
CHECKED BY	CSH
	12AUG16
SHEET SIZE	D
SHEET NO.	1 OF 1

View File Created 15-AUG-2016 07:32:51