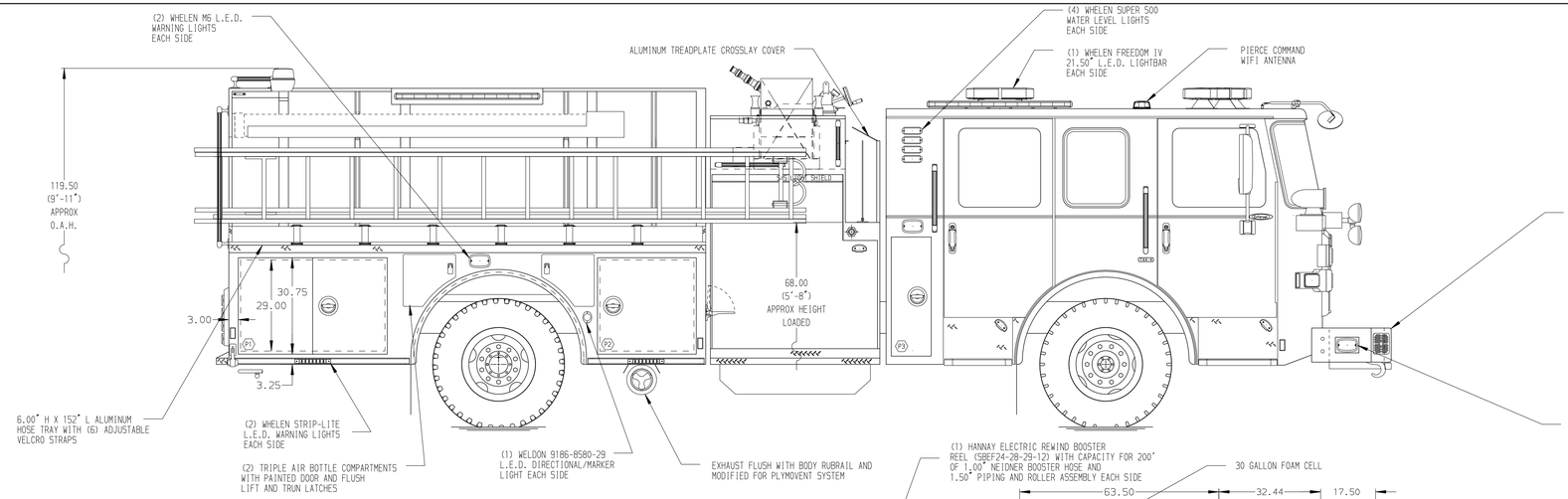

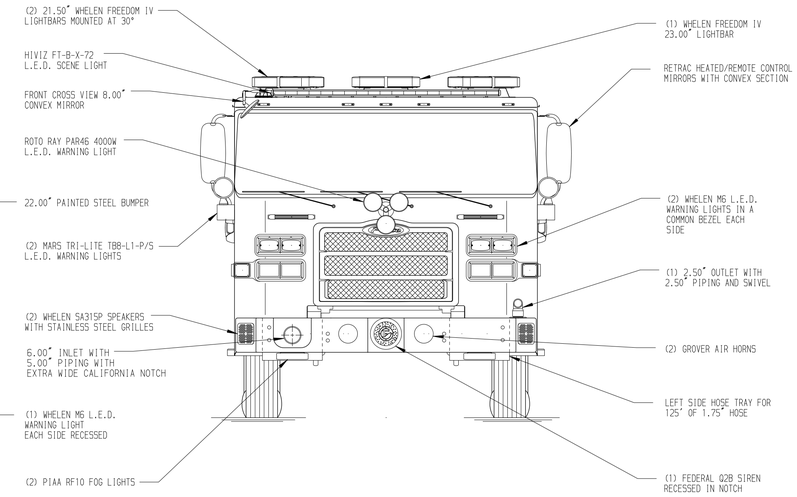

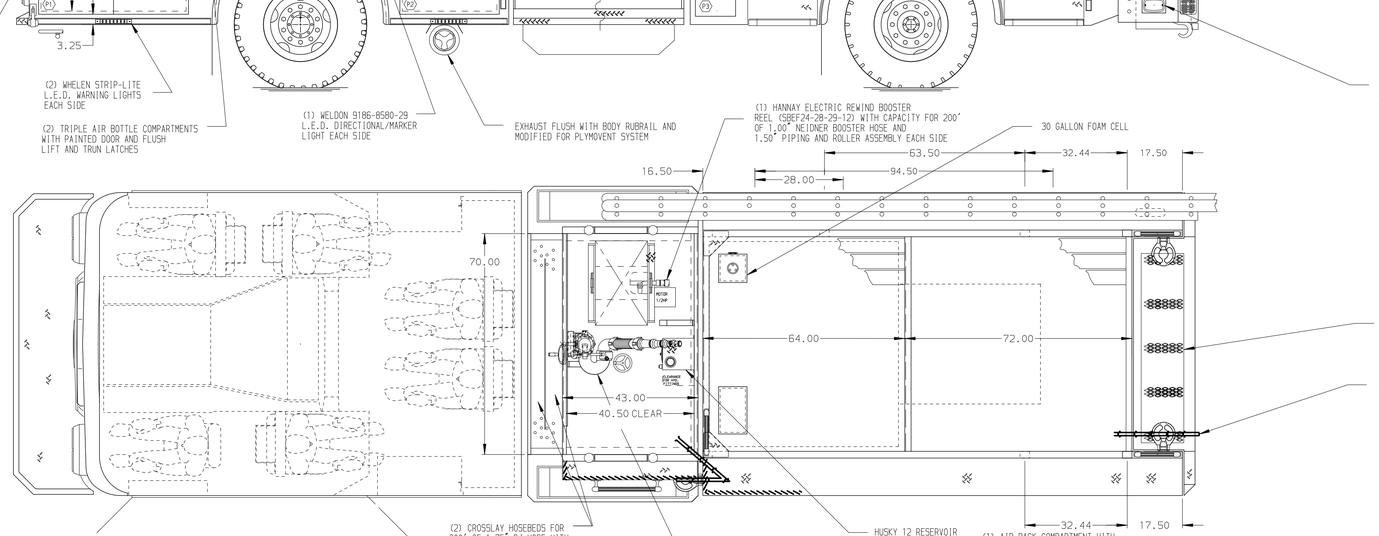

HOSEBED CAPACITIES

1. 300' OF 1.75" MERCEDES AQUAFLOW HOSE
2. 300' OF 1.75" MERCEDES AQUAFLOW HOSE
3. 1500' OF 5.00" MERCEDES MEGAFLOW HOSE
4. 400' OF 3.00" MERCEDES AQUAFLOW HOSE
5. 200' OF 2.50" MERCEDES AQUAFLOW HOSE
6. 200' OF 3.00" MERCEDES AQUAFLOW HOSE

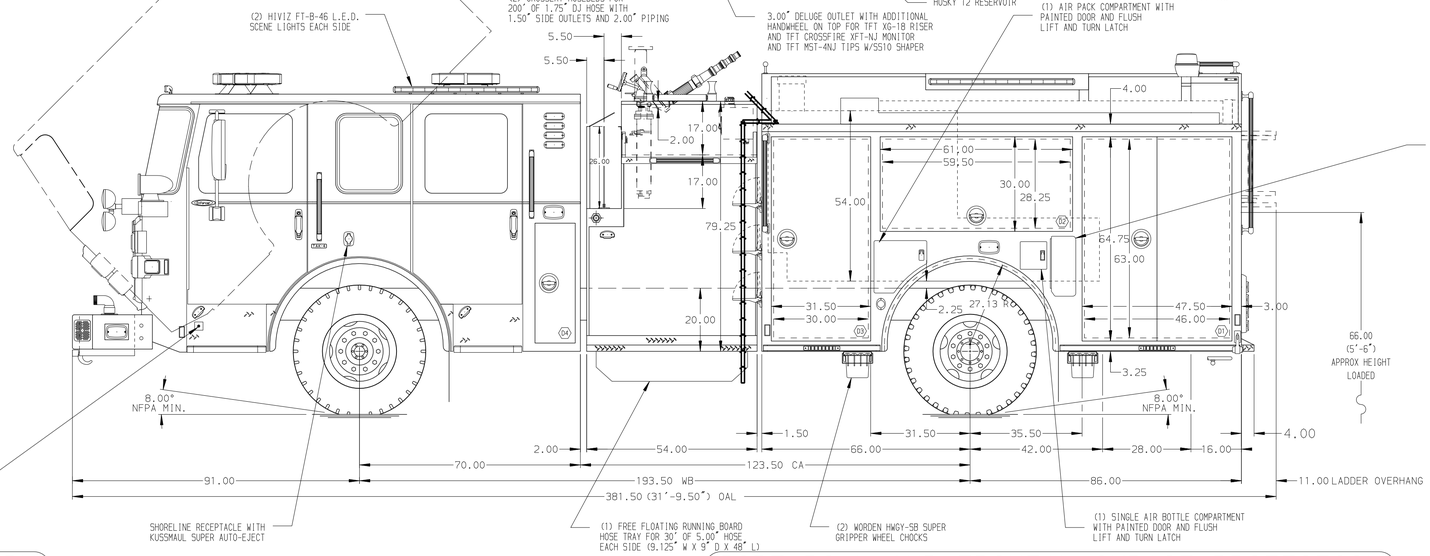

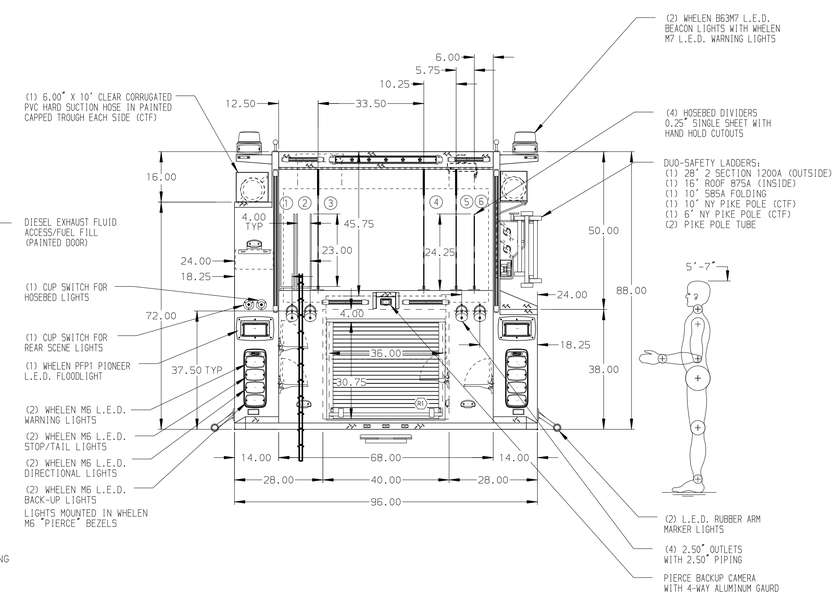

ALUMINUM BODY

SIDE ROLL AND FRONTAL IMPACT PROTECTION

NOTE

DIMENSIONS SHOWN ARE APPROXIMATE AND ARE SUBJECT TO MINOR DEVIATIONS AS MAY OCCUR OR BE NECESSARY IN CONSTRUCTION.
MINOR DETAILS NOT SHOWN.

1. ONSPOT AUTOMATIC TIRE CHAINS TO BE PROVIDED AT REAR
2. ALUMINUM 4-WAY ON CAB ROOF
3. ROSCO WINDSHIELD MOUNTED CAMERA SYSTEM WITH DVR
4. BATTERY CHARGER LOCATED BEHIND DRIVER'S SEAT
5. BATTERY CHARGE INDICATOR LOCATED ON DRIVER'S SEAT RISER
6. DUAL L.E.D. LIGHT STRIPS LOCATED IN HOSE BED
7. PULL STRAP ON DOOR IN COMPARTMENT D2
8. REVERSED HINGED DOOR ON COMPARTMENT D3
9. S/STL SCUFFPLATE ON BOTTOM EDGE OF DOOR FRAMING OF ALL HINGED SIDE OF DOOR
10. DRIP PAN GUARD FOR ROLL-UP DOOR LOCATED R1
11. ONE FULL WIDTH/DEPTH ADJUSTABLE SHELF LOCATED IN COMPARTMENT D1 & D3
12. ONE FLOOR MOUNTED SLIDE-OUT TRAY IN COMPARTMENT D3 & R1
13. TWO ADJUSTABLE TOOL BOARDS MOUNTED TO SLIDE-OUT TRAY IN COMPARTMENT D3
14. ALUMINUM PEGBOARD WITH TRACKS ON THE REAR WALL OF COMPARTMENT D1, D2, & D3
15. ONE 15/20A 120V DUPLEX RECEPTACLE LOCATED BEHIND OFFICERS SEAT

REV	DATE	BY	CH
5	05JAN18	MMF	DTS
4	17NOV17	JWO	NPA

CHASSIS DATA — MAKE: PIERCE — MODEL: ENFORCER

TITLE: 1500-D-780 750 GAL WATER W/30 GAL FOAM 152" DS FH PS LOW, (2)XLAYS, LADRS ON SS PS, DELUGE, HUSKY 12

FOR: UPPER ALLEN FIRE DEPARTMENT, MECHANICSBURG, PENNSYLVANIA

DWG NO.: 31894AD

Pierce MANUFACTURING INC.

JOB NO.	31894
SCALE	1:24
DATE	07NOV17
DRAWN BY	MMF
CHECKED BY	NPA
SHEET SIZE	D
SHEET NO.	1 OF 1

View File Created 05-JAN-2018 12:46:47