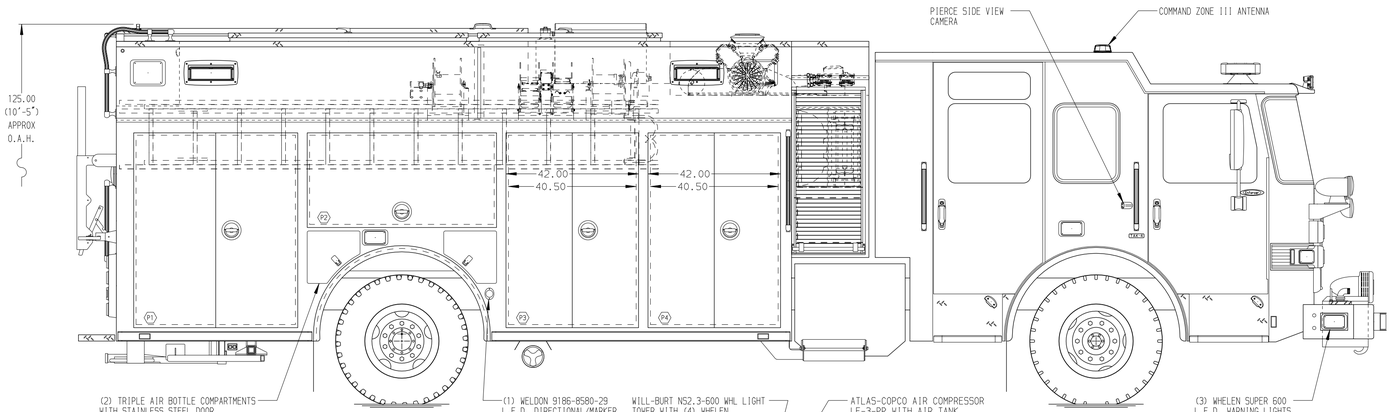

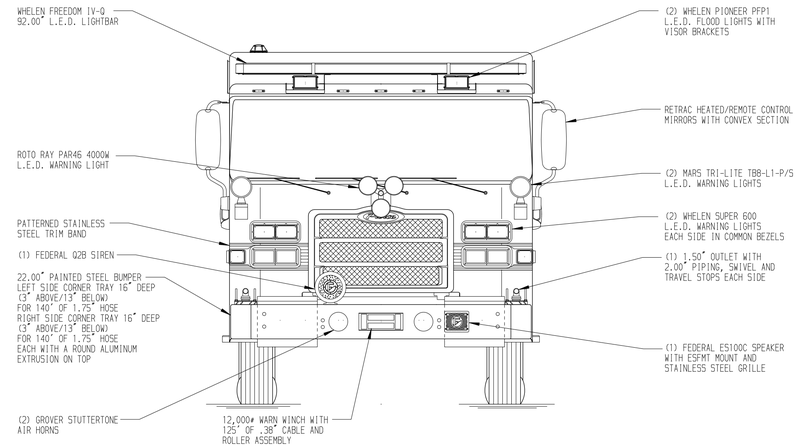

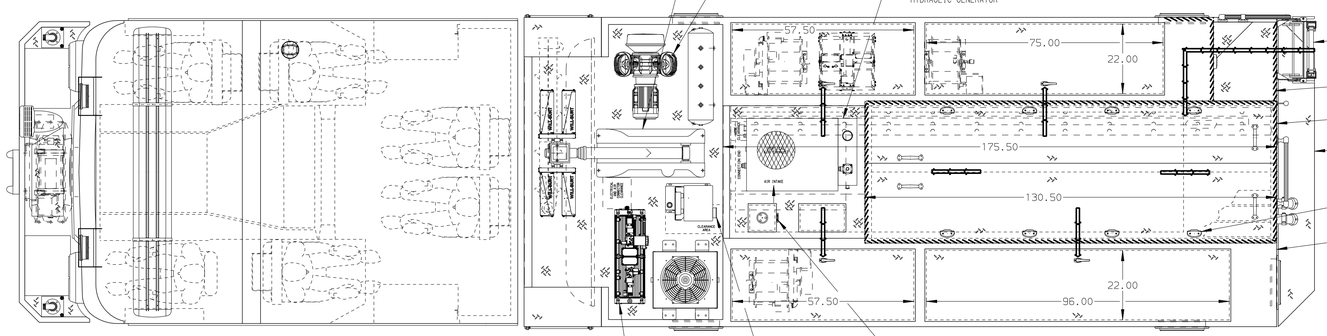

HOSEBED CAPACITIES

1. 200' OF 3.00" MERCEDES AQUAFLOW HOSE
2. 300' OF 3.00" MERCEDES AQUAFLOW HOSE
3. 250' OF 1.75" MERCEDES AQUAFLOW HOSE
4. 800' OF 5.00" MERCEDES MEGAFLOW HOSE

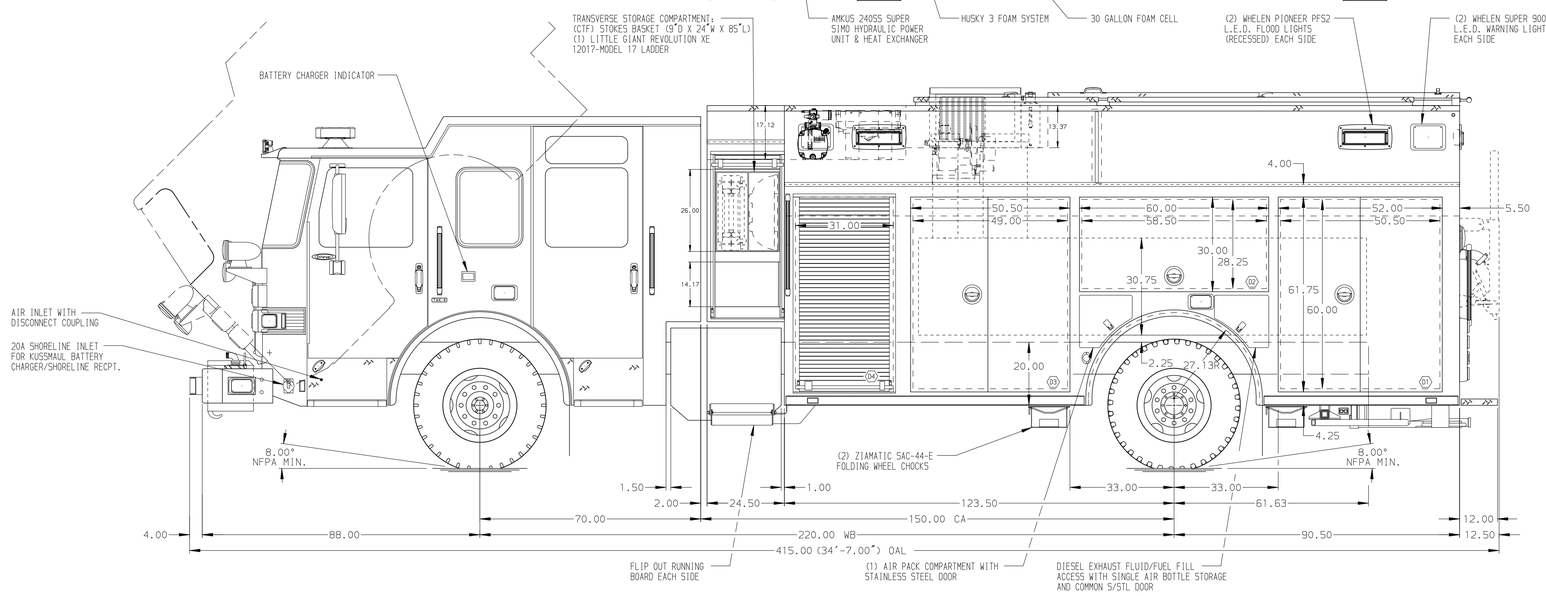

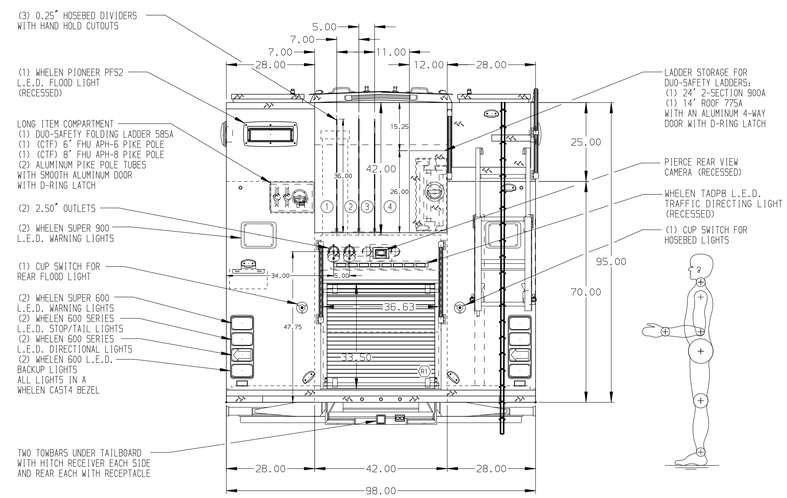

ALUMINUM BODY

SIDE ROLL AND FRONTAL IMPACT PROTECTION

NOTE

DIMENSIONS SHOWN ARE APPROXIMATE AND ARE SUBJECT TO MINOR DEVIATIONS AS MAY OCCUR OR BE NECESSARY IN CONSTRUCTION.
MINOR DETAILS NOT SHOWN.

1. ONSPOT AUTOMATIC TIRE CHAINS TO BE PROVIDED AT REAR
2. KUSSMAUL 1000 BATTERY CHARGER LOCATED BEHIND DRIVER SEAT
3. TWO 20A, 120V DUPLEX RECEPTACLES BEHIND DRIVER AND OFFICER'S SEATS

REV	DATE	BY	CH
1	17JUL17	NPA	GHO
0	12JUN17	NPA	GHO

CHASSIS DATA
MAKE: PIERCE
MODEL: ENFORCER

Pierce MANUFACTURING INC.

TITLE: 1500-D-600P, 570G WATER W/30G FOAM, 214" PUC RESCUE LADDERS IN HOSEBED, GENERATOR, HUSKY 3, REELS
FOR: FAIRVIEW TOWNSHIP FIRE DEPARTMENT NEW CUMBERLAND, PENNSYLVANIA
DWG NO.: 31228AD-SH1

JOB NO.	31228
SCALE	1:24
DATE	05MAY17
DRAWN BY	NPA
CHECKED BY	CSH
DATE	06MAY17
SHEET SIZE	D
SHEET NO.	1 OF 2

View File Created 20-JUL-2017 15:36:48