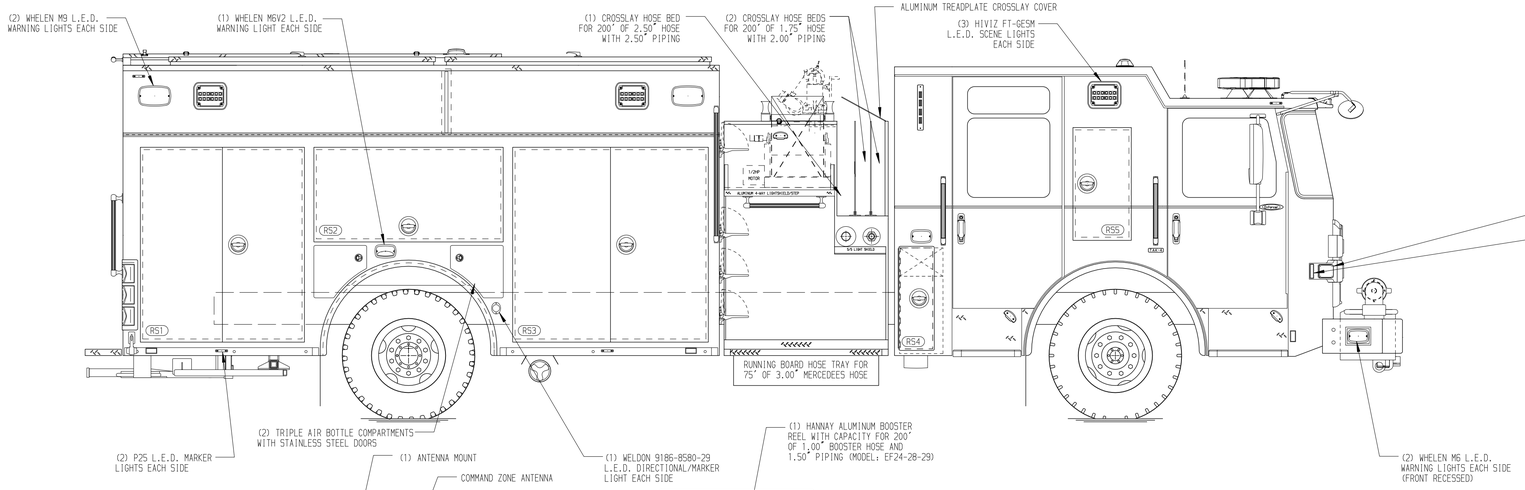

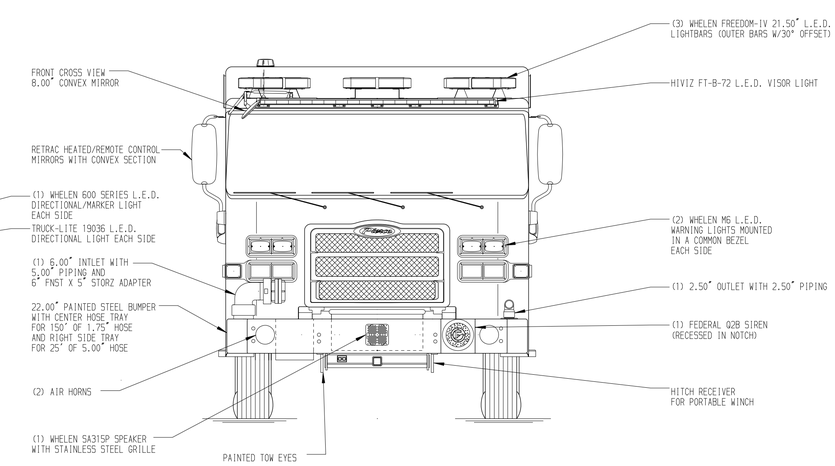

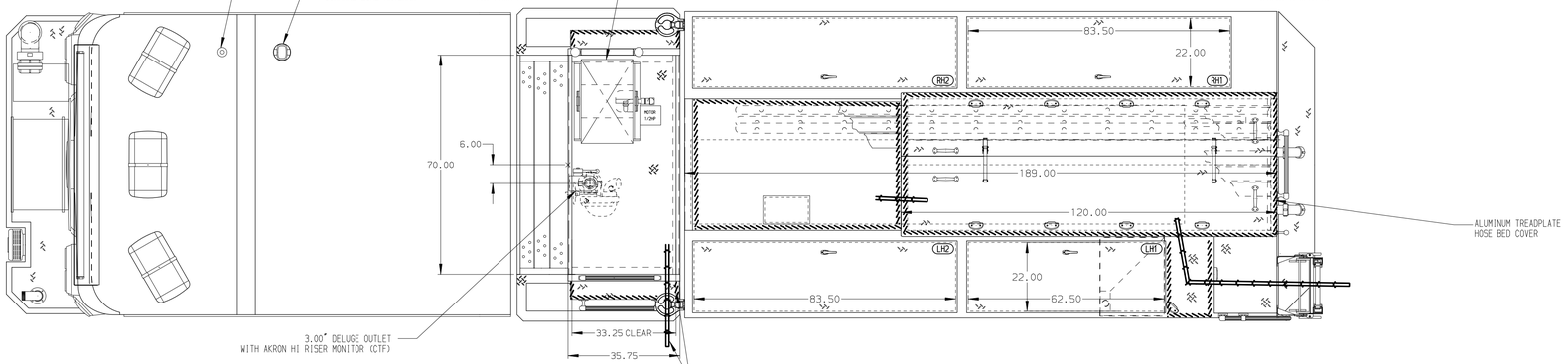

HOSEBED CAPACITIES

1. 400' OF 1.75" MERCEDEES HOSE
2. 1000' OF 5.00" MERCEDEES HOSE
3. 600' OF 3.00" MERCEDEES HOSE

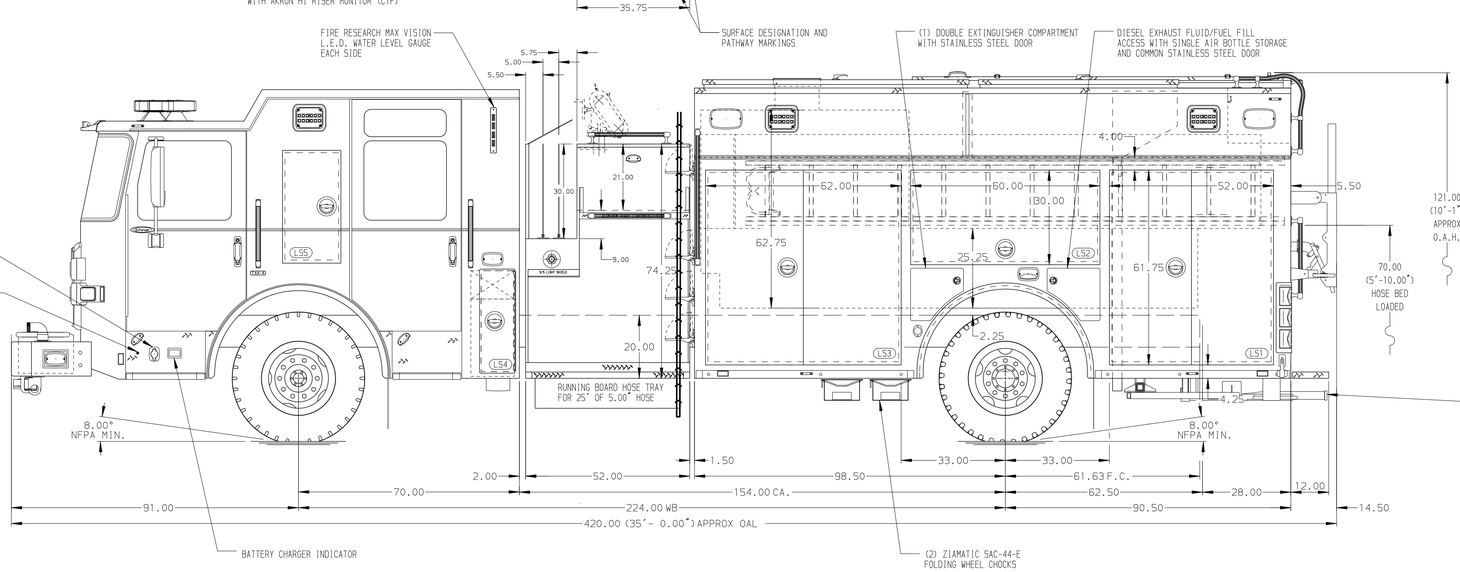

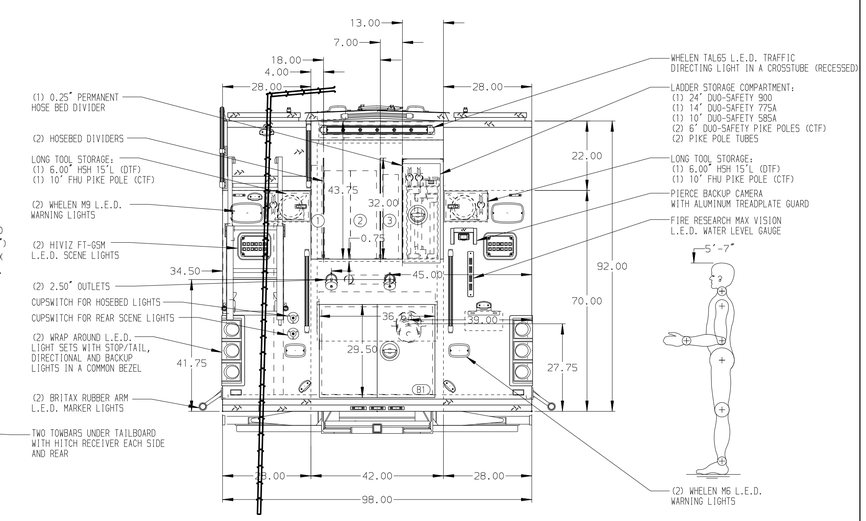

ALUMINUM BODY

SIDE ROLL AND FRONTAL IMPACT PROTECTION

NOTE

DIMENSIONS SHOWN ARE APPROXIMATE AND ARE SUBJECT TO MINOR DEVIATIONS AS MAY OCCUR OR BE NECESSARY IN CONSTRUCTION.
MINOR DETAILS NOT SHOWN.

1. ONSPOT AUTOMATIC TIRE CHAINS TO BE PROVIDED AT REAR
2. KUSSMAUL BATTERY CHARGER/AIR COMPRESSOR LOCATED PER ORDER
3. BATTERY CHARGER LOCATED BEHIND DRIVER'S SEAT

REV	DATE	BY	CH
7	31MAR23	KLE	COS
6	03FEB23	CDU	CZA

CHASSIS DATA: MAKE PIERCE; MODEL ENFORCER

Pierce MANUFACTURING INC.

TITLE: 2000-D-750 GAL POLY, 189" HDRP BODY
LADDERS IN HOSE BED , (3) CROSSLAYS, DELUGE

FOR: WARRIOR RUN AREA FIRE DEPARTMENT
WATSONTOWN, PENNSYLVANIA

DWG NO.: 37727AD

JOB NO.	37727
SCALE	1:24
DATE	
DRAWN BY	KLE 27JAN23
CHECKED BY	CDU 30JAN23
SHEET SIZE	D
SHEET NO.	1 OF 1

View File Created 31-MAR-2023 14:26:37