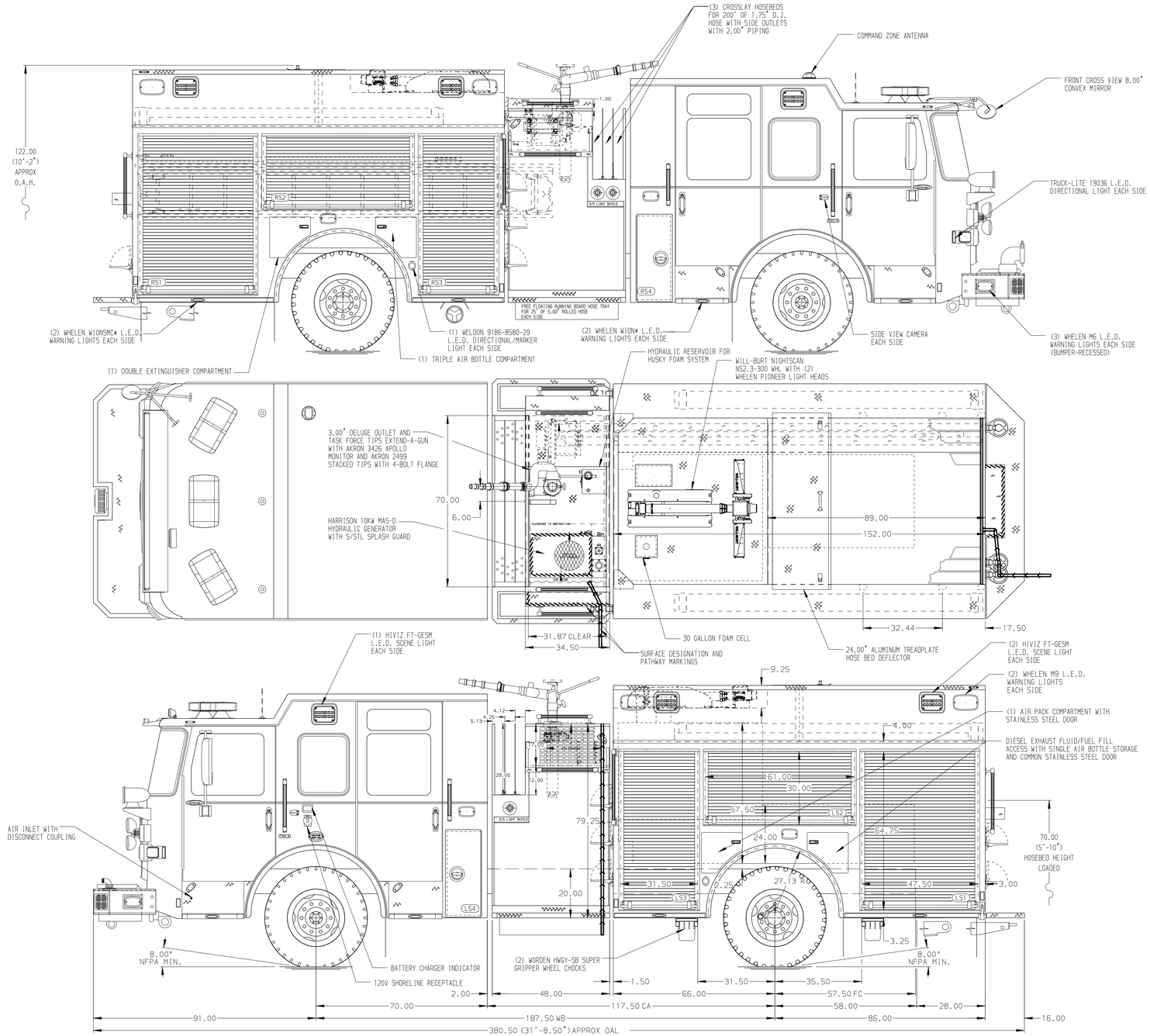

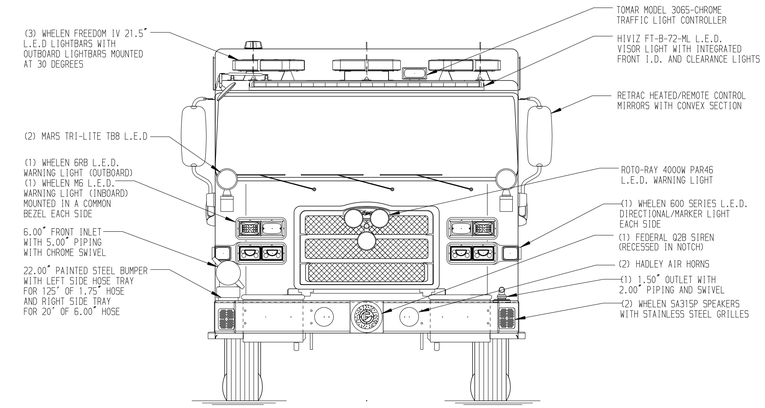

HOSEBED CAPACITIES

1. 200' OF 2.50" SPO MERCEDES MTFS-800-DP HOSE
2. 200' OF 3.00" SPO MERCEDES MTFS-800-DP HOSE
3. 200' OF 1.75" SPO MERCEDES MTFS-800-DP HOSE
4. 1500' OF 5.00" SPO MERCEDES MEGAFLO HOSE
5. 600' OF 3.00" SPO MERCEDES MTFS-800-DP HOSE

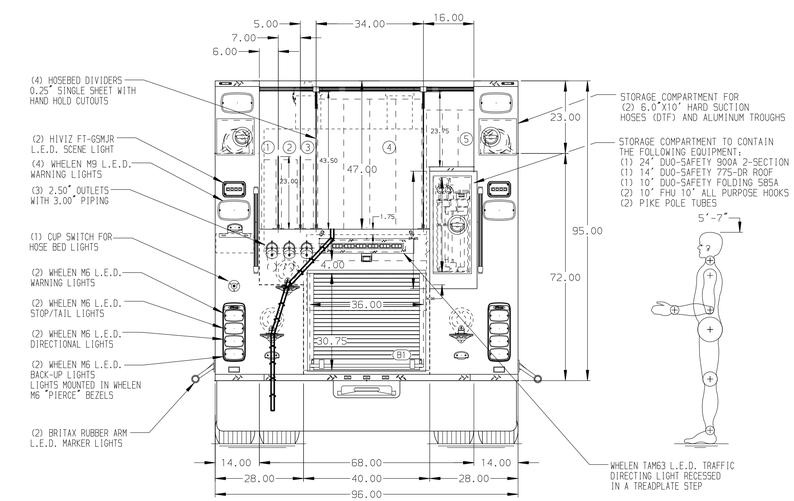

ALUMINUM BODY

NOTE

DIMENSIONS SHOWN ARE APPROXIMATE AND ARE SUBJECT TO MINOR DEVIATIONS AS MAY OCCUR OR BE NECESSARY IN CONSTRUCTION.
MINOR DETAILS NOT SHOWN.

1. ONSPOT AUTOMATIC TIRE CHAINS TO BE PROVIDED AT REAR
2. BATTERY CHARGER LOCATED BEHIND DRIVER SEAT
3. DUAL L.E.D. LIGHT STRIPS LOCATED IN HOSE BED
4. L.E.D. LIGHT STRIP LOCATED ON THE FRONT OF THE HOSEBED
5. SEVEN DRIP PANS GUARD FOR ROLL-UP DOORS LOCATED PER ORDER
6. CIRCUIT BREAKER PANEL LOCATED PER ORDER
7. ONE HANNAY ELECTRIC REWIND CORD REEL MODEL 1616-17-18 LOCATED PER ORDER WITH 150' OF 10/3 CABLE WITH ALUMINUM TREADPLATE COVER
8. NINE 120V DUPLEX RECEPTACLES LOCATED PER ORDER

REV	DATE	BY	CH
1	07OCT25	LST	COS
2	26AUG25	LST	COS
3	30MAY25	CDU	CDU

CHASSIS DATA
MAKE: PIERCE
MODEL: ENFORCER

Pierce MANUFACTURING INC.

TITLE: 1500 GPM, 780 G TANK, 750 G WATER, 30 G FOAM CELL 152" BODY, MUX
FOR: ALPHA FIRE COMPANY - STATE COLLEGE
STATE COLLEGE, PENNSYLVANIA
DWG NO.: 39840AD

JOB NO.	39840
SCALE	1:24
DATE	
DRAWN BY	LST 22MAY25
CHECKED BY	KLH 23MAY25
SHEET SIZE	D
SHEET NO.	1 OF 1

View File Created 26-NOV-2025 14:59:49