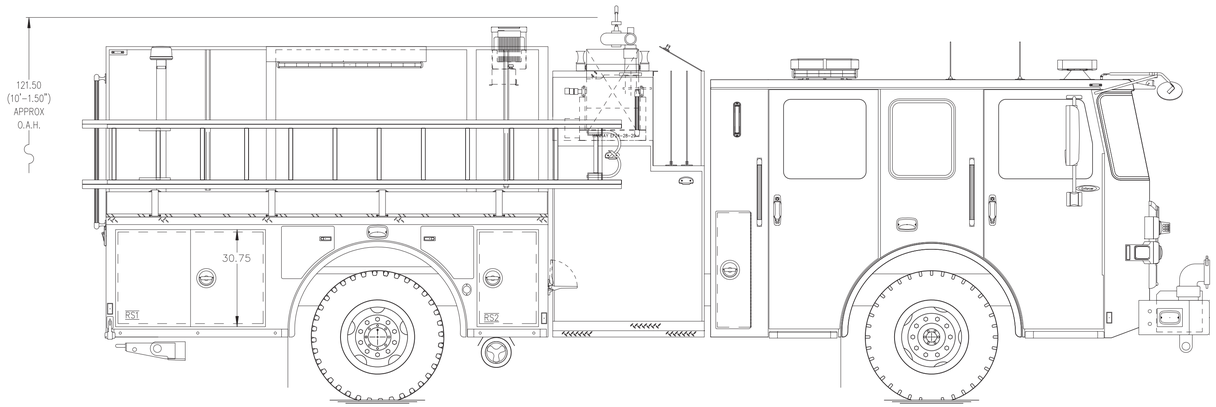

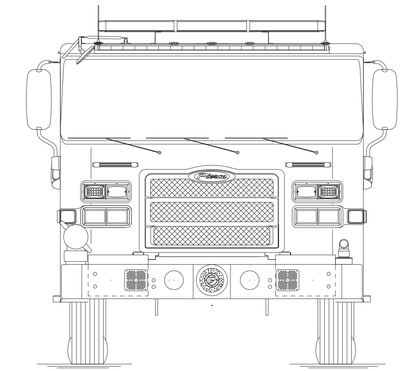

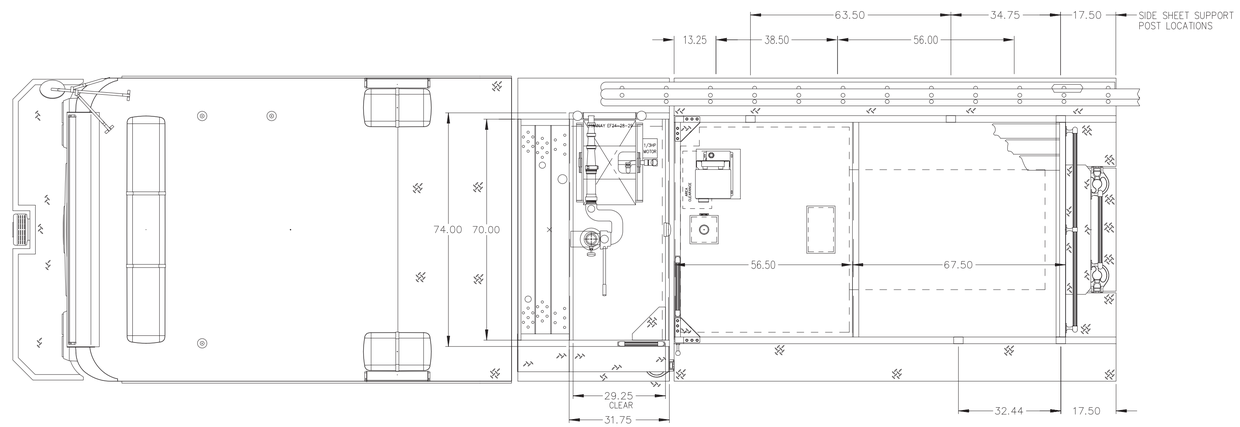

HOSEBED CAPACITIES

1 – 200' OF 1.75" D.J. HOSE
2 – 200' OF 2.50" D.J. HOSE
3 – 1000' OF 5.00" D.J. HOSE
4 – 200' OF 2.50" D.J. HOSE
5 – 200' OF 1.75" D.J. HOSE

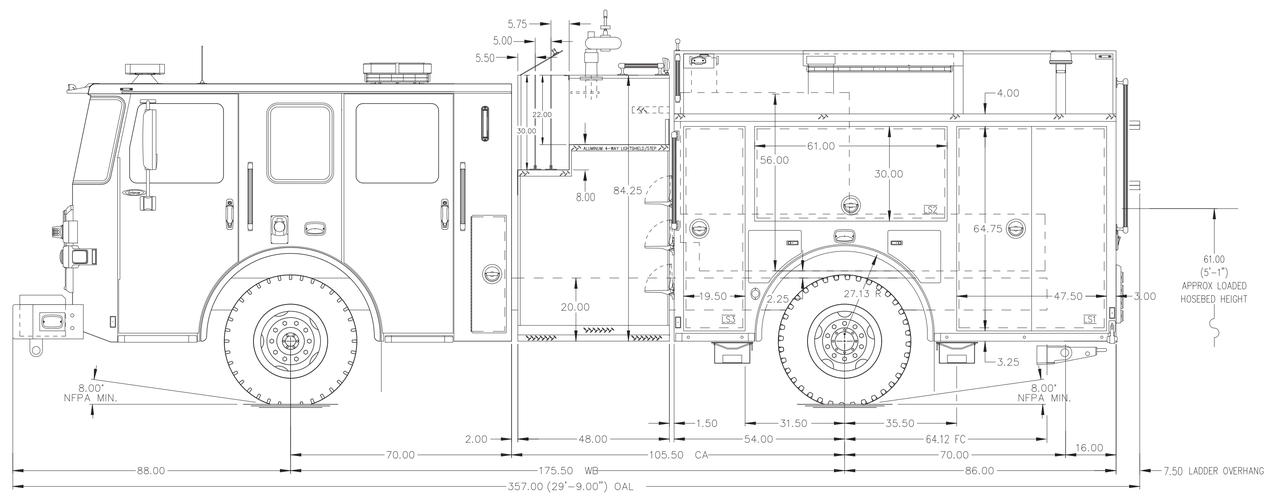

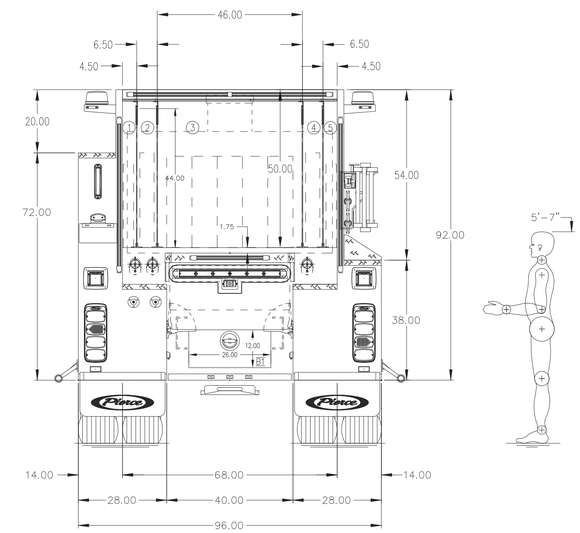

ALUMINUM BODY

SIDE ROLL AND FRONTAL IMPACT PROTECTION

NOTE
DIMENSIONS SHOWN ARE APPROXIMATE AND ARE SUBJECT TO MINOR DEVIATIONS AS MAY OCCUR OR BE NECESSARY IN CONSTRUCTION.
MINOR DETAILS NOT SHOWN.

REV	DATE	BY	CH
▽	–	–	–

Pierce MANUFACTURING INC.		PROPOSAL	748
		SCALE 1:24	DATE
CHASSIS DATA	TITLE	2000-D-770P, 750G WTR, 20 FOAM, 140" FULL HEIGHT/LOW (3) CROSSLAYS, DELUGE, BOOSTER REEL	DRAWN BY KRG / 24AUG2022
MAKE PIERCE	FOR	CRANBERRY TOWNSHIP VOLUNTEER FIRE COMPANY CRANBERRY TOWNSHIP, PENNSYLVANIA	CHECKED BY N/A / N/A
MODEL ENFORCER	DWG NO.	PRELIMINARY PRINT ONLY	SHEET SIZE D / SHEET NO. 1 OF 1