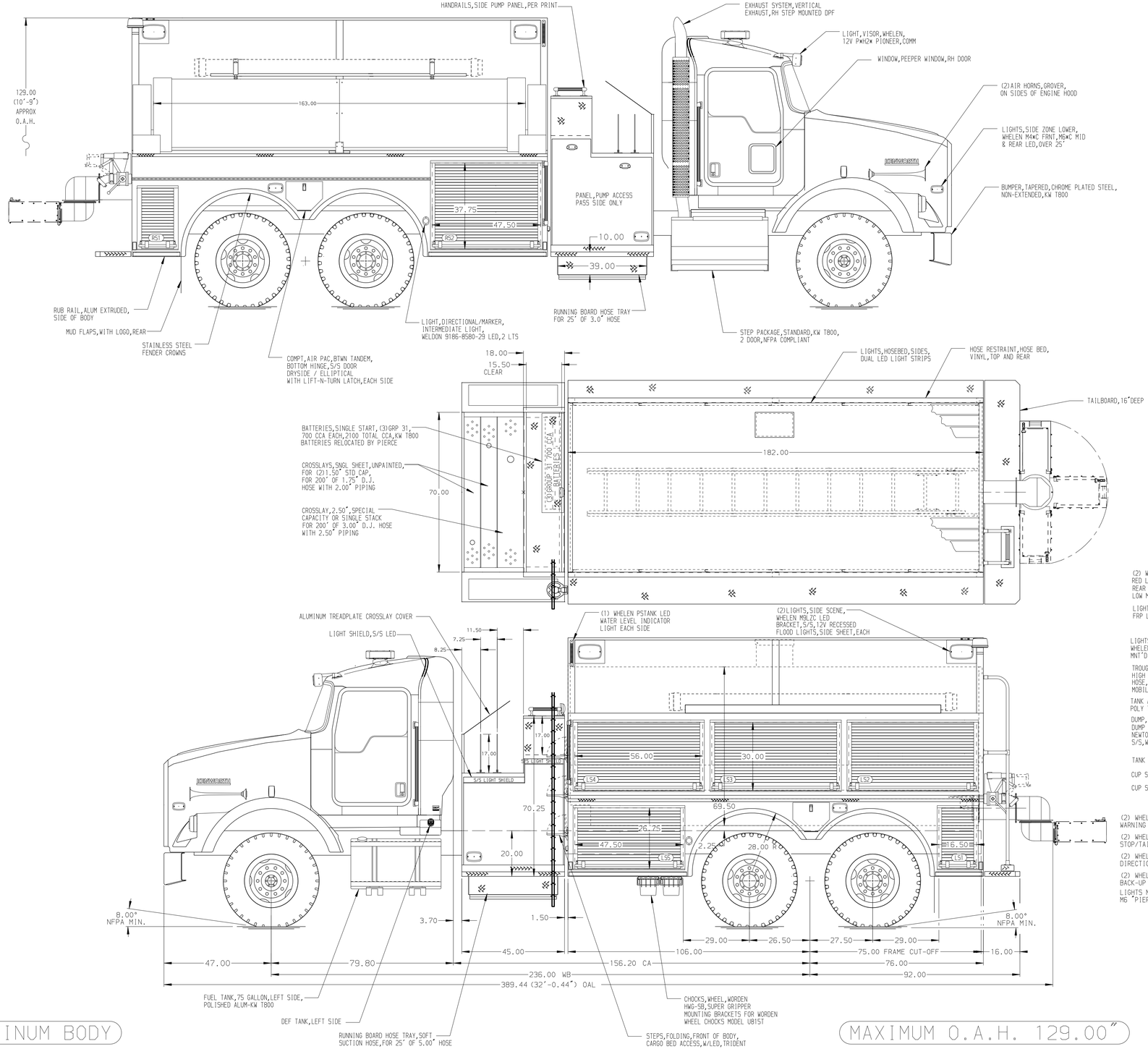

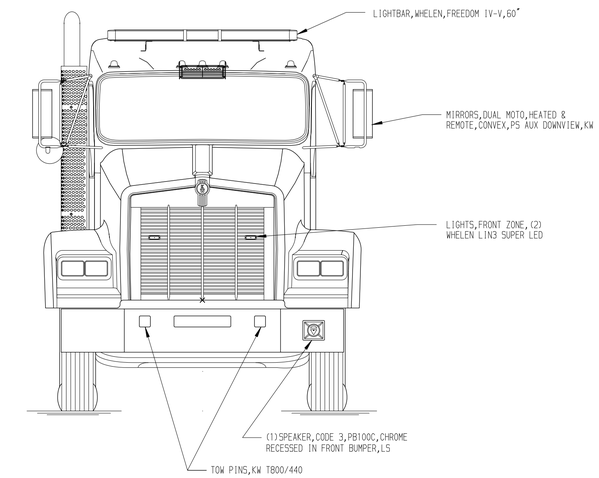

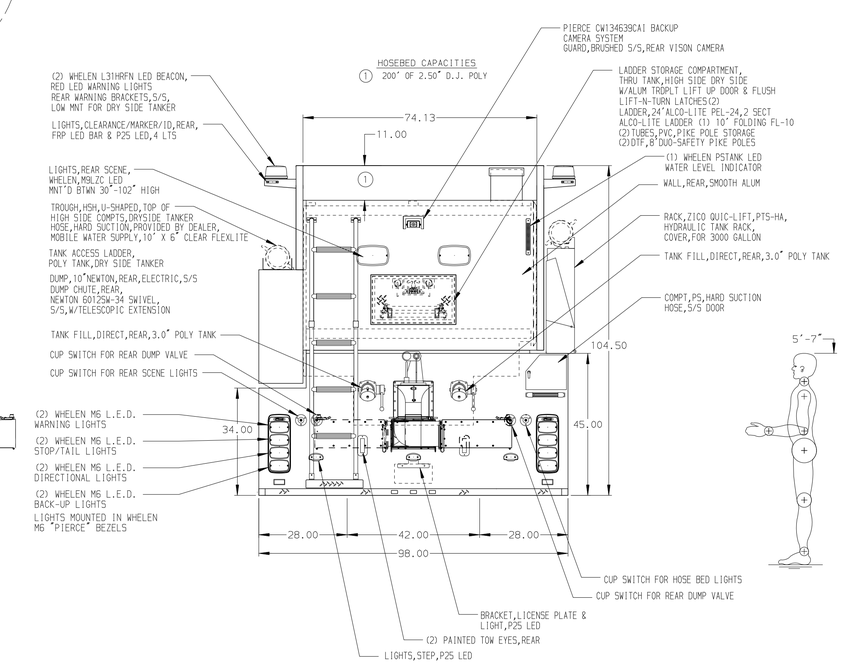

ALUMINUM BODY

MAXIMUM O.A.H. 129.00"

NOTE

DIMENSIONS SHOWN ARE APPROXIMATE
AND ARE SUBJECT TO MINOR DEVIATIONS
AS MAY OCCUR OR BE NECESSARY IN
CONSTRUCTION.
MINOR DETAILS NOT SHOWN.

REV	DATE	BY	CH
B	12JUN19	JLA	GSC
A	07MAY19	JAF	DDR

CHASSIS DATA — MAKE: KENWORTH — MODEL: T800

TITLE: 1250-D-2800 POLY,182"HIGH SIDE DRYSIDE BODY
45"SIDE CONTROL,(2)1.5" & (1)2.5"CROSSLAYS

FOR: RIDGEBURY VOLUNTEER FIRE COMPANY
GILLETT,PENNSYLVANIA

DWG NO.: 33293AD

Pierce MANUFACTURING INC.

JOB NO.	33293
SCALE	1:24
DATE	
DRAWN BY	JAF 20FEB19
CHECKED BY	RWI 28FEB19
SHEET SIZE	D
SHEET NO.	1 OF 1

View File Created 14-JUN-2019 12:01:42