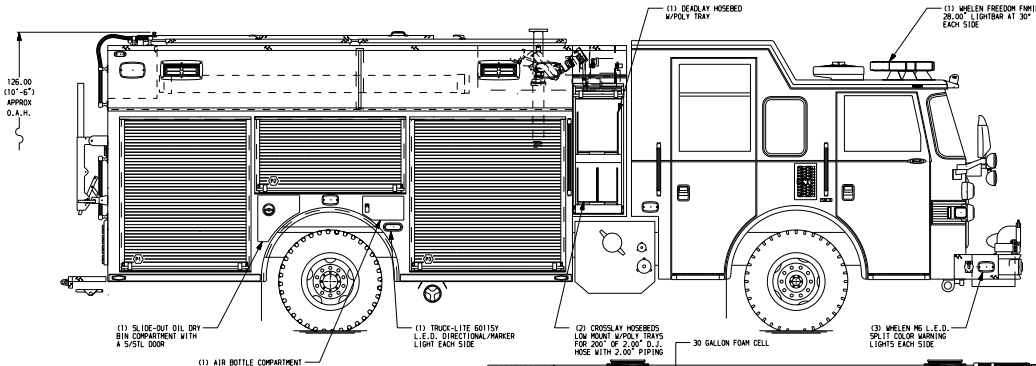

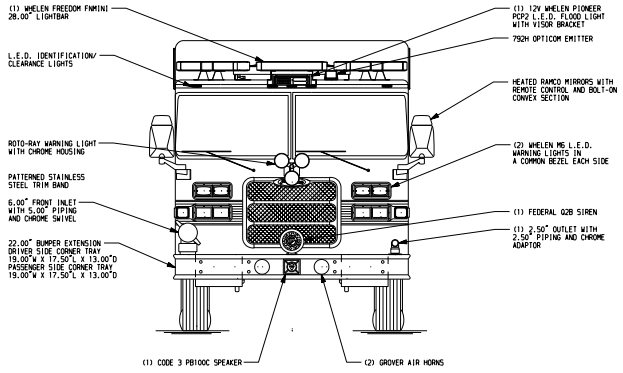

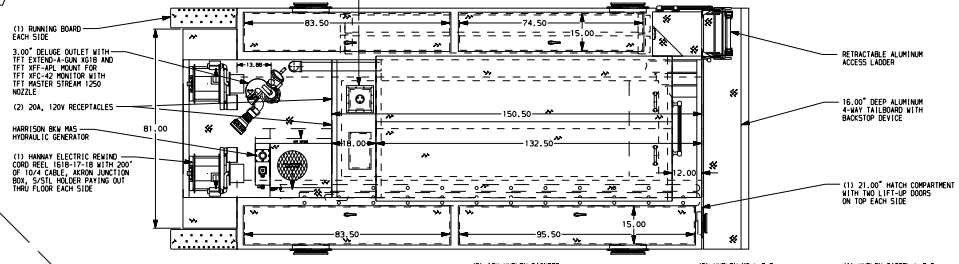

HOSEBED CAPACITIES
1. 1500' OF 5.00" D.J. HOSE
2. 300' OF 3.50" D.J. HOSE
3. 250' OF 2.50" D.J. HOSE
4. 250' OF 2.50" D.J. HOSE

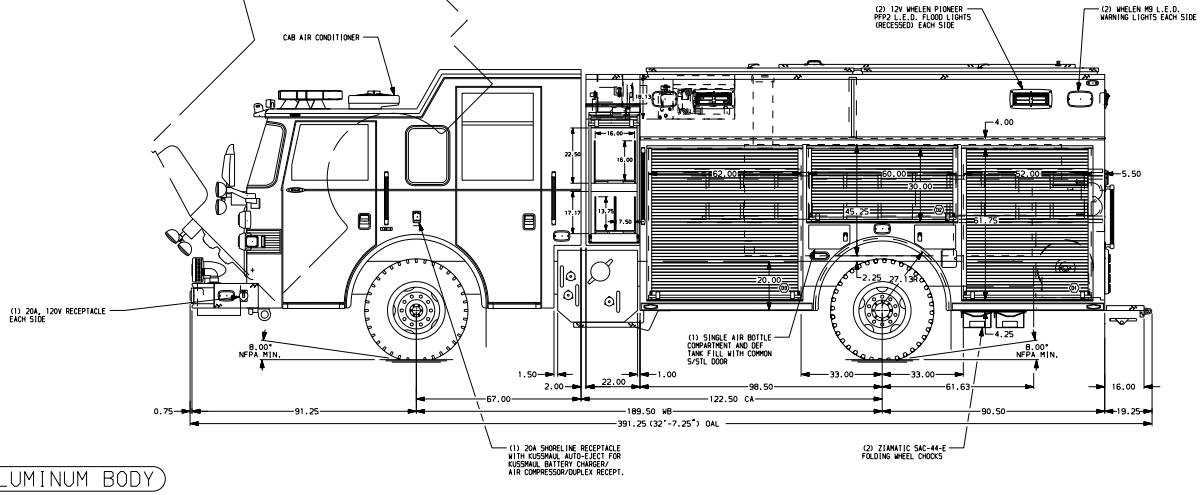

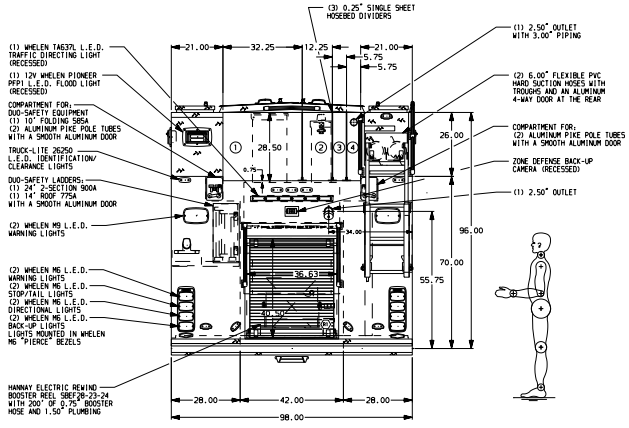

31. STORAGE BIN FOR (4) PRESSURIZED WATER EXTINGUISHERS IN COMPARTMENT D1
32. TWO ADDITIONAL SPEEDLAY TRAYS SHIPPED LOOSE
33. FOUR 20A, 120V DUPLEX RECEPTACLES LOCATED IN CAB

ALUMINUM BODY

NOTE
DIMENSIONS SHOWN ARE APPROXIMATE AND ARE SUBJECT TO MINOR DEVIATIONS AS MAY OCCUR OR BE NECESSARY IN CONSTRUCTION.
MINOR DETAILS NOT SHOWN.

1. MOUNTING BASES FOR ANTENNAS LOCATED PER SHOP ORDER
2. KUSSMAUL PUMP PLUS 1000 BATTERY CHARGER LOCATED IN COMPARTMENT D3
3. AIR INLET WITH DISCONNECT COUPLING LOCATED ON DS PUMP PANEL
4. ONE PAINTED ADJUSTABLE TILTING SLIDE-OUT TRAY IN COMPARTMENT P1; TWO IN P2
5. ONE SWING-OUT ALUMINUM TOOL BOARD IN COMPARTMENT D2
6. ROLL-OUT PROTECTIVE FLAP FOR BODY PANEL LOCATED IN D2 & P2
7. TURTLE TILE MATTING WITH RAMP ON FLOOR OF COMPARTMENTS D3, P1 & P3
8. TURTLE TILE MATTING ON ALL SHELVES AND TRAYS
9. ONE PAINTED FULL WIDTH/DEPTH SHELF IN COMPARTMENTS D1, D3 & R1; TWO IN P1
10. LITTLE GIANT LADDER MODEL 17-10102 LOCATED IN COMPARTMENT P3
11. CIRCUIT BREAKER PANEL IN COMPARTMENT D3
12. SUB-FEED CIRCUIT BREAKER PANEL IN COMPARTMENT D3
13. BATTERY CHARGER INDICATOR LOCATED IN D.S. STEP WELL
14. STAINLESS STEEL FENDER CROWNS FRONT AND REAR
15. PIERCE LOGO MUDFLAPS FRONT AND REAR
16. ONSPOT AUTOMATIC TIRE CHAINS
17. ON SCENE L.E.D. NIGHT STICK LIGHTS BELOW HOSEBED COVER
18. ON SCENE L.E.D. COMPARTMENT LIGHTS IN ALL COMPARTMENTS
19. ANDOR LUMA STRIP LIGHTS LOCATED IN HATCH COMPARTMENTS
20. AKRON EDUCTOR SINGLE AGENT FOAM SYSTEM
21. PERIMETER SCENE LIGHTS LOCATED PER SHOP ORDER
22. ONE 15A, 120V DUPLEX RECEPTACLE IN COMPARTMENTS D1, D2, D3, P1, P2 & P3
23. ONE PAINTED SLIDE-OUT FLOOR TRAY IN COMPARTMENT D1
24. ONE PAINTED SLIDE-OUT TRAY IN COMPARTMENT P1; TWO IN P3
25. ONE TWO-DRAWER CTECH CABINET IN COMPARTMENT D3
26. PAC TRAC ON REAR TANK WALL OF COMPARTMENT D3
27. ONE ADJUSTABLE VERTICAL PARTITION ON FLOOR TRAY IN COMPARTMENT D1
28. ONE FIXED VERTICAL PARTITION IN COMPARTMENT P1
29. HORIZONTAL MOUNTING TRACKS LOCATED IN COMPARTMENT D1
30. STORAGE BIN FOR (6) AIR BOTTLES IN COMPARTMENT D1

REV	DATE	BY	CH
1	09AUG11	NPA	DTS
2	23JUN11	NPA	JEC

CUSTOMER APPROVAL
APPROVED BY: _____
DATE: _____

CHASSIS DATA
MAKE: PIERCE
MODEL: AX6716

Pierce MANUFACTURING INC.

TITLE: 1500-D-750P W/30 GAL FOAM CELL, 189" RESCUE PUC (2) XLAYS, LADDERS THRU BODY, GENERATOR, REELS
FOR: PARKLAND FIRE COMPANY, PARKLAND, PENNSYLVANIA
DWG NO. 24632AD

JOB NO. 24632
SCALE 1:24
DATE
DRAWN BY NPA 19APR11
CHECKED BY CSH 20APR11
SHEET SIZE D
SHEET NO. 1 OF 1

View File Created 09-AUG-2011 11:18:22