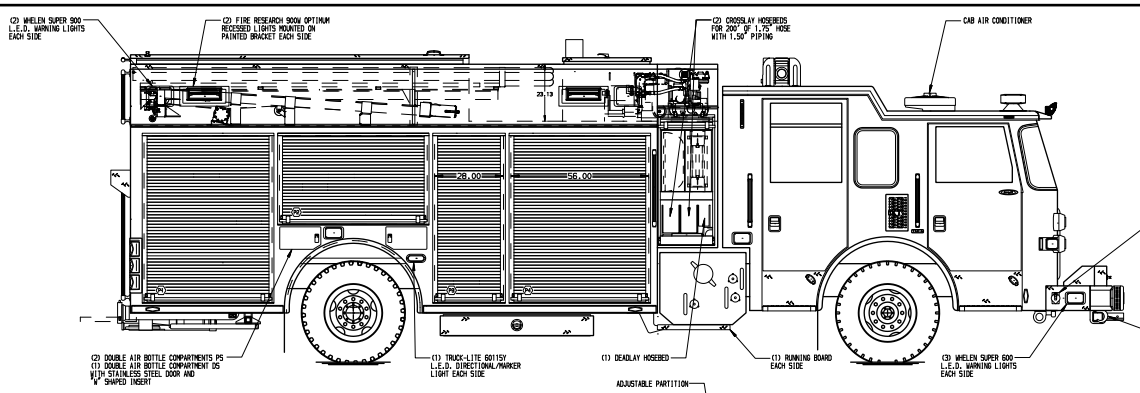

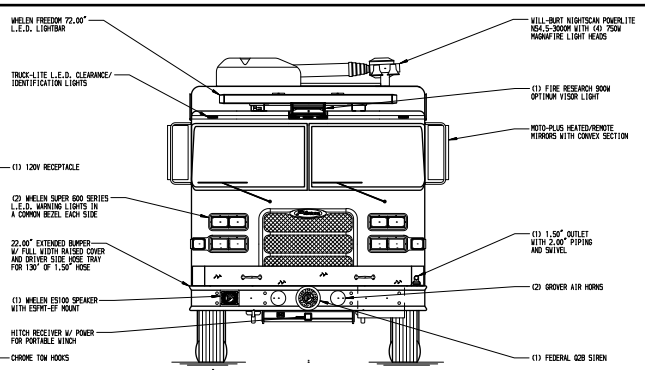

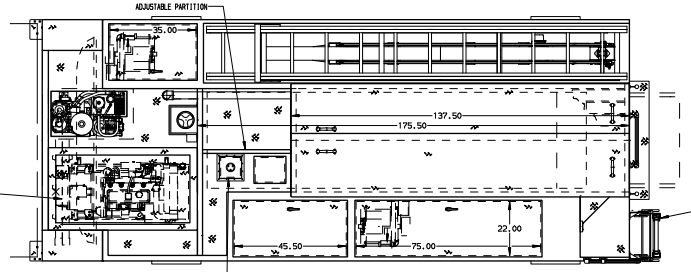

HOSEBED CAPACITIES
1. 700' OF 5.00" D.J. HOSE
2. 300' OF 3.00" D.J. HOSE

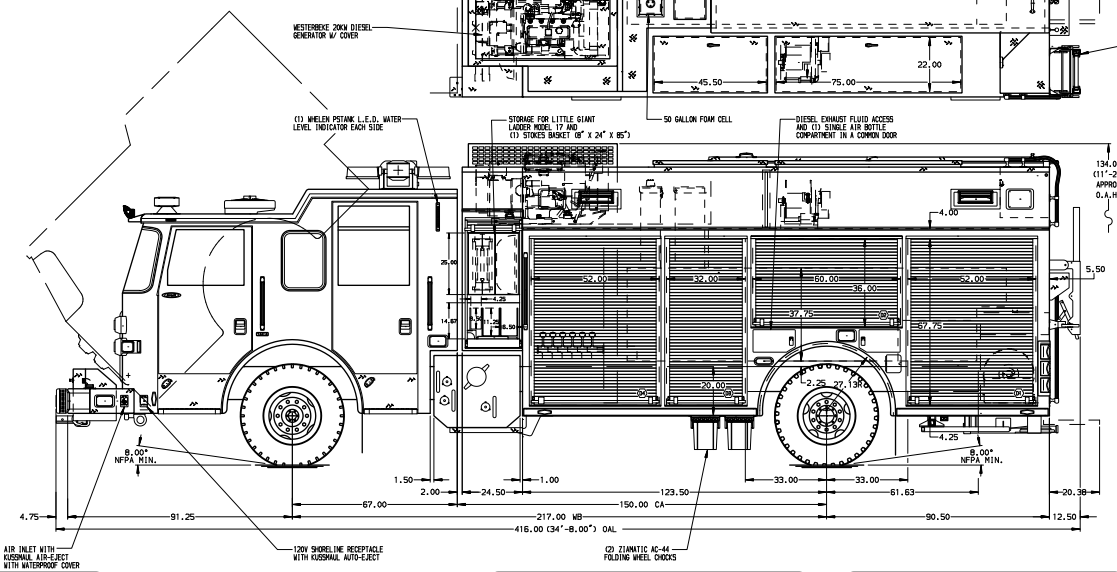

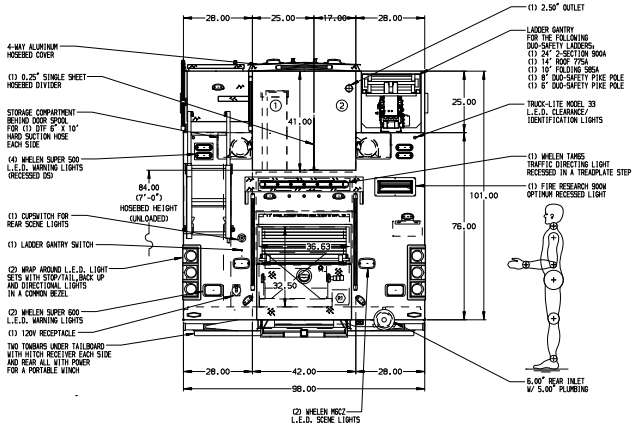

ALUMINUM BODY

FRONT IMPACT PROTECTION

SIDE ROLL PROTECTION

NOTE

DIMENSIONS SHOWN ARE APPROXIMATE AND ARE SUBJECT TO MINOR DEVIATIONS AS MAY OCCUR OR BE NECESSARY IN CONSTRUCTION. MINOR DETAILS NOT SHOWN.

1. S/STL SCUFFPLATE ON EACH CAB DOOR JAMB
2. MOUNTING BASES FOR 2-WAY RADIO ANTENNAS LOCATED PER SHOP ORDER
3. BATTERY CHARGER MOUNTED BEHIND PASSENGER'S SIDE SEAT
4. BATTERY CHARGE INDICATOR LOCATED ON D.S. SEAT RISER WITH BRACKET
5. SUB-FEED CIRCUIT BREAKER PANEL IN COMPARTMENT D4
6. PERIMETER SCENE LIGHTS LOCATED PER SHOP ORDER
7. PULL STRAP ON DOOR ON ALL SIDE BODY COMPARTMENTS
8. PIERCE L.E.D. COMPARTMENT DUAL LIGHT STRIPS LOCATED PER SHOP ORDER
9. ONE ADJUSTABLE FULL WIDTH/FULL DEPTH SHELF IN COMPARTMENTS D4 & R1
10. ONE VERTICAL BOLT-IN PARTITION BETWEEN COMPARTMENTS D1-R1 & P1-R1
10. ONE FLOOR MOUNTED SLIDE-OUT TRAY IN COMPARTMENTS D3, D4, P3, & P4
11. ONE 0.25" SINGLE SHEET HOSE BED DIVIDER SHIPPED LOOSE
12. ONE ADJUSTABLE TILTING SLIDE-OUT TRAY IN COMPARTMENTS D2, D3, P2, & P4
13. ONE SLIDE-OUT ALUMINUM TOOL BOARD IN COMPARTMENTS D1 & P1
14. S/STL FENDER CROWNS FRONT AND REAR
15. (2) ADDITIONAL POLY TRAYS SHIPPED LOOSE
16. 140 CFM COMPRESSED AIR FOAM SYSTEM
17. CIRCUIT BREAKER PANEL IN COMPARTMENT D4
18. AIR OUTLET W/ SHUT OFF VALVE LOCATED ON D5 PUMP PANEL
19. PIERCE LOGO MUDFLAPS FRONT AND REAR
20. ONE HANNAY ELECTRIC REWIND CORD REEL MODEL 1618-17-18 LOCATED IN HATCH COMPARTMENT EACH SIDE WITH 200' OF 10/3 CABLE WITH AN ALUMINUM ENCLOSURE
21. TWO 240V RECEPTACLE LOCATED ON FRONT HOSEBED CROSS DIVIDER FOR HYDRAULIC POWER UNITS
22. ONE 120V 6-PLACE RECEPTACLE STRIP LOCATED IN CAB
23. HANNAY BOOSTER REEL MODEL SBE32-21-22-8 WITH CAPACITY FOR 200' OF 1.00" BOOSTER HOSE LOCATED IN R1
24. HUSKY 12 FOAM SYSTEM
25. TWO 9900# TIE DOWNS SHIPPED LOOSE
26. ON SCENE SOLUTIONS L.E.D. LIGHT STICKS LOCATED BELOW HOSEBED COVER
27. LIGHT TOWER CONTROLLER TO BE RECESSED IN PARTITION IN COMPARTMENT D3
28. MOUNTING FOR CTF HOLMATRO SPU60E-230 HYDRAULIC POWER SUPPLY IN FORWARD PORTION OR HOSEBED

CUSTOMER APPROVAL

APPROVED BY: _____

DATE: _____

REV	DATE	BY	CH
V	22MAY13	SHA	DTS
V	30APR13	COL	DTS
V	21MAR13	COL	DTS
V	26FEB13	COL	SHA

CHASSIS DATA	
MAKE	PIERCE
MODEL	AX6710

Pierce MANUFACTURING INC.

TITLE: 1500-D-750P W/50 GAL FOAM CELL, 214" RESCUE PUC (2) XLAYS, LADDER GANTRY, DIESEL GENERATOR

FOR: RIDGE FIRE COMPANY, SPRING CITY, PENNSYLVANIA

DWG NO. 26716AD

JOB NO.	26716
SCALE	1:24
DATE	
DRAWN BY	COL 19FEB13
CHECKED BY	CSH 20FEB13
SHEET SIZE	D
SHEET NO.	1 OF 1

View File Created 23-MAY-2013 07:18:20