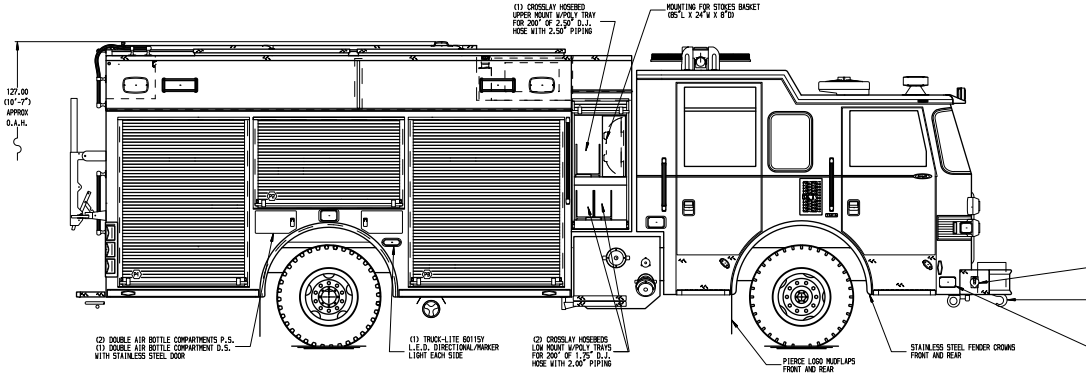

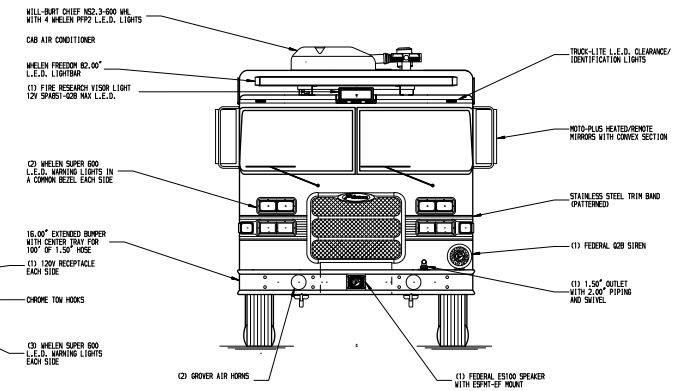

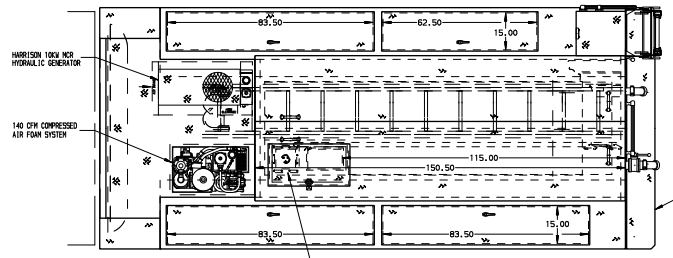

HOSEBED CAPACITIES
1. 1200' OF 5.00" D.J. HOSE
2. 500' OF 3.00" D.J. HOSE

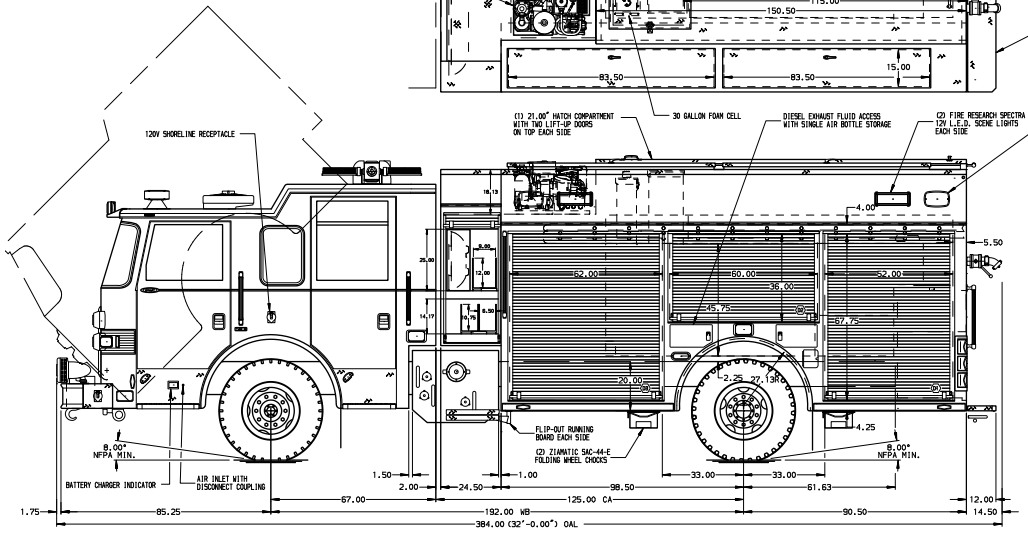

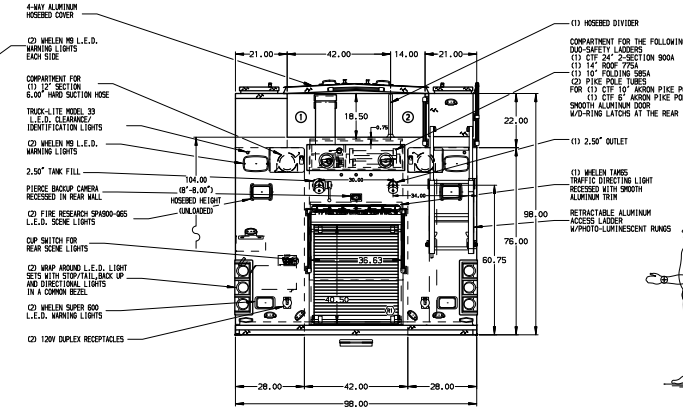

ALUMINUM BODY | MAXIMUM O.A.H. 127.00" | MAXIMUM O.A.L. 384.00" | SIDE ROLL AND FRONTAL IMPACT PROTECTION

NOTE
DIMENSIONS SHOWN ARE APPROXIMATE AND ARE SUBJECT TO MINOR DEVIATIONS AS MAY OCCUR OR BE NECESSARY IN CONSTRUCTION.
MINOR DETAILS NOT SHOWN.

1. ALUMINUM TREADPLATE EXTERIOR REAR WALL OF CAB
2. MOUNTING BASES FOR ANTENNAS LOCATED PER SHOP ORDER
3. PERIMETER SCENE LIGHTS LOCATED PER SHOP ORDER
4. PIERCE L.E.D. DUAL COMPARTMENT LIGHT STRIPS LOCATED PER SHOP ORDER
5. ONE PAINTED ADJUSTABLE FULL WIDTH/FULL DEPTH SHELF IN COMPARTMENTS D1,P1
6. THREE PAINTED ADJUSTABLE FULL WIDTH/FULL DEPTH SHELVES IN COMPARTMENT P3
7. ONE PAINTED FLOOR MOUNTED SLIDE-OUT TRAY IN COMPARTMENTS D1,P1
8. ONE PAINTED ADJUSTABLE SLIDE-OUT TRAY IN COMPARTMENTS D3,R1
9. ONE PAINTED ADJUSTABLE TILTING SLIDE-OUT TRAY IN COMPARTMENT D1,D2,D3,P1,P2
10. TWO ALUMINUM SLIDE-OUT TOOL BOARDS IN COMPARTMENT P3
11. ROLL-OUT PROTECTIVE FLAP FOR BODY PANEL LOCATED IN COMPARTMENTS D2,P2
12. ONE VERTICAL BOLT-IN PARTITION BETWEEN COMPARTMENTS D1-R1 & P1-R1
13. ONE VERTICAL PARTITION IN COMPARTMENT P3
14. CIRCUIT BREAKER PANEL IN COMPARTMENT D3
15. ONE DUO-SAFETY 35' 3-SECTION LADDER SHIPPED LOOSE

REV	DATE	BY	CH
3	28JUL14	JWO	DTS
2	07JUN14	JWO	DTS
1	09MAY14	JWO	TEO

CHASSIS DATA
MAKE: PIERCE
MODEL: ARROW XT

Pierce MANUFACTURING INC.

TITLE: 1500-D-750P W/30 GAL FOAM CELL, 189" PUC RESCUE (3) XLAYS, LADDERS BELOW HOSEBED, GENERATOR
FOR: CAERNARVON FIRE COMPANY, CAERNARVON, PENNSYLVANIA
DWG NO.: 27842AD

JOB NO.	27842
SCALE	1:24
DATE	
DRAWN BY	JWO
28APR14	
CHECKED BY	CSH
30APR14	
SHEET SIZE	D
SHEET NO.	1 of 1

View File Created 26-NOV-2014 10:07:53